COMPLETE CARPENTRY LLC

GABRIEL GONZALEZ – CEO
Phone: 786-847-9201
DIDER VARGAS – MANAGER
Phone: 561-255-1822

1478 SW 1ST WAY
Deerfield Beach, FL, 33441

Gngcompletecarpentry@gmail.com

www.gngcompletecarpentry.com

TABLE OF CONTENTS

Product Information

Construction Details 2

Section Details

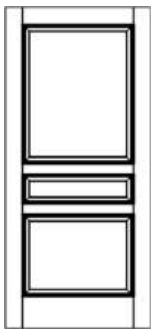

Model: Avalon — Page: 3

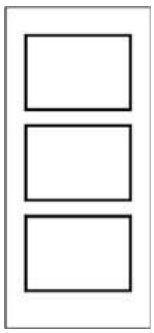

Birkdale — 7

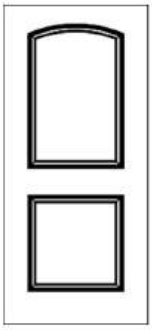

Caiman — 16

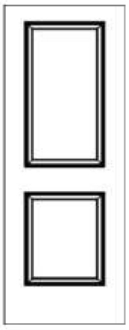

Cambridge — 24

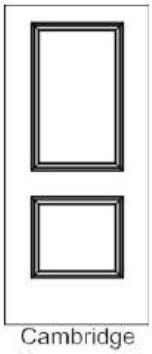

Cambridge Commercial — 30

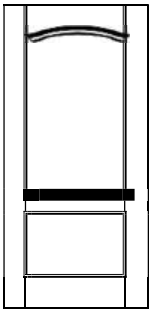

Camden — 32

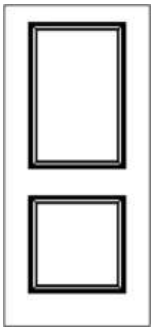

Carrara — 36

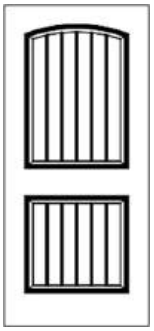

Cashal — 42

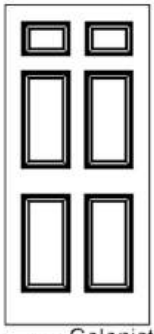

Model: Colonist Smooth — Page: 48

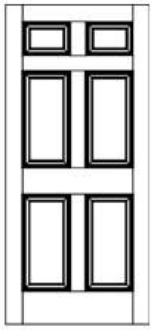

Colonist Pine — 57

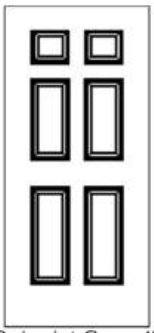

Colonist Smooth Commercial — 66



Conmore — 68

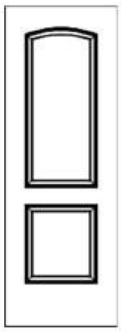

Continental — 74

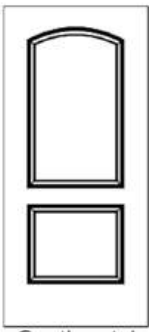

Continental Commerical — 80

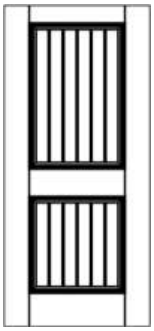

Corvado — 82

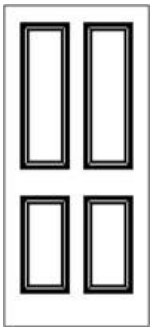

Coventry — 88

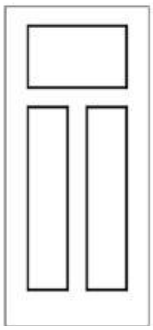

Model: Craftsman — Page: 97

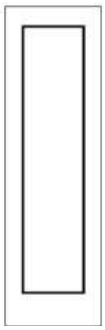

Madison — 103

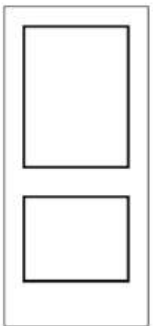

Monroe — 109

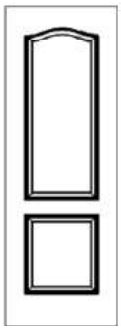

Princeton — 115

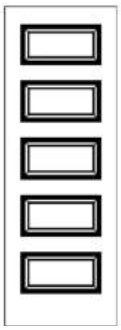

Rockport — 121

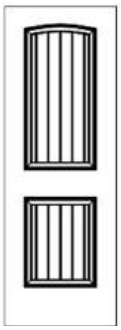

Santa Fe — 126

CONSTRUCTION DETAILS

ProCore THE QUIET DOOR

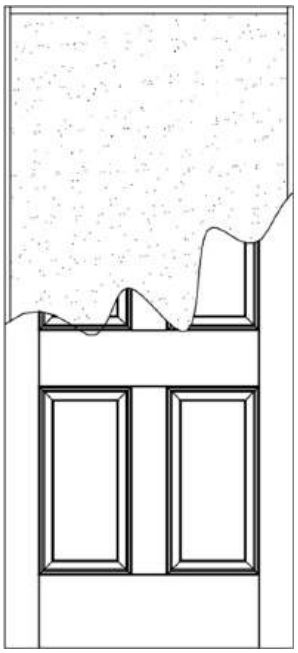

Solid Particle Board Core -
Combination Wood/MDF or
All-Wood Frame

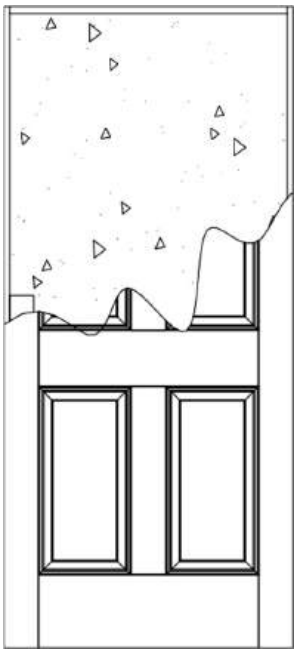

Solid Mineral Core -
Combination Wood/Composite Frame
*Not available in Birkdale, Conmore, Craftsman, Madison, and Monroe

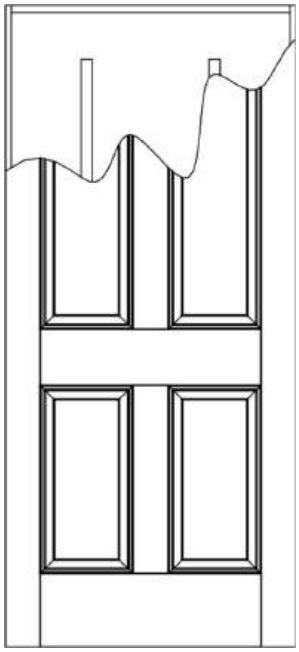

Hollow Core -
MDF Frame
*Hollow Core Construction May Vary By Production Facility

AVALON OAK GRAIN 6'-8"

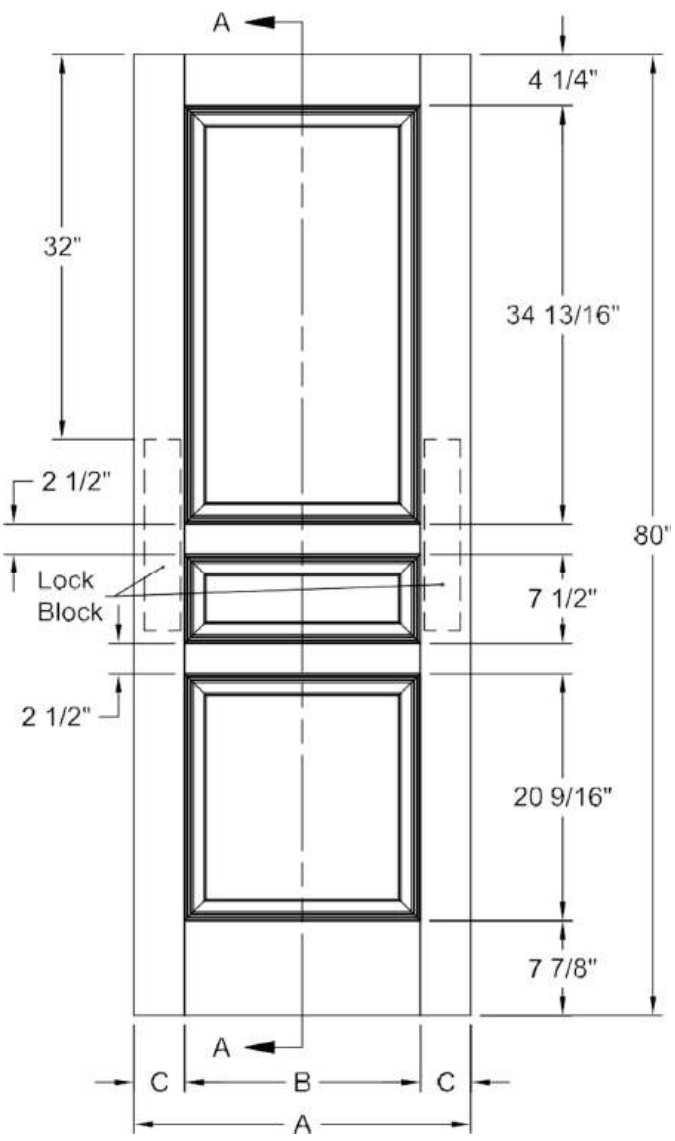

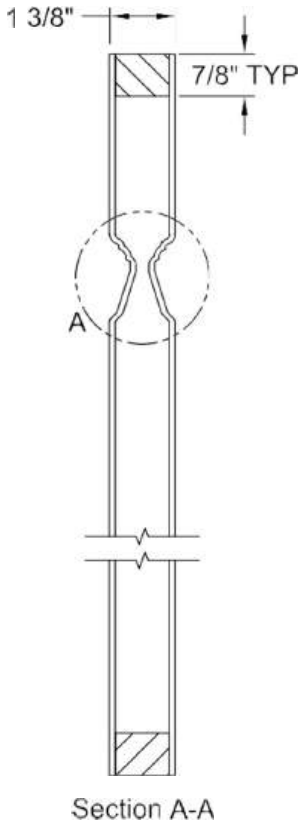

Section A-A

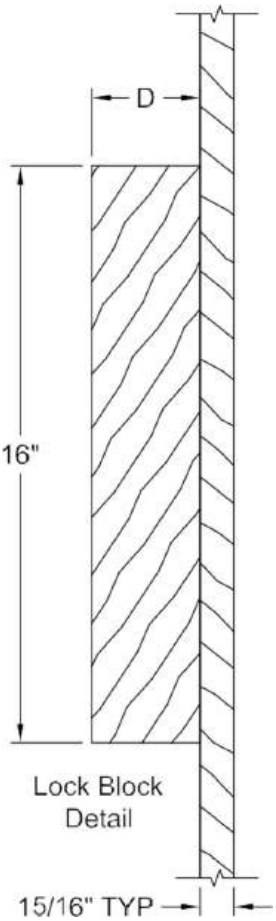

Lock Block
Detail

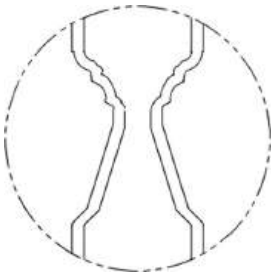

Detail A
Cove & Bead
Sticking

Dimension Table				
Door Size	A	B	C	D
3'-0" x 6'-8"	36"	27 5/8"	4 3/16"	3"
2'-10" x 6'-8"	34"	23 5/8"	5 3/16"	3"
2'-8" x 6'-8"	32"	23 5/8"	4 3/16"	3"
2'-6" x 6'-8"	30"	21 5/8"	4 3/16"	3"
2'-4" x 6'-8"	28"	19 5/8"	4 3/16"	3"
2'-2" x 6'-8"	26"	19 5/8"	3 3/16"	2 1/8"
2'-0" x 6'-8"	24"	15 5/8"	4 3/16"	3"
1'-10" x 6'-8"	22"	15 5/8"	3 3/16"	2 1/8"
1'-8" x 6'-8"	20"	8 3/4"	5 5/8"	3"
1'-6" x 6'-8"	18"	8 3/4"	4 5/8"	3"
1'-4" x 6'-8"	16"	7 11/16"	4 5/32"	3"
1'-3" x 6'-8"	15"	7 11/16"	3 21/32"	2 1/8"
1'-2" x 6'-8"	14"	7 11/16"	3 5/32"	2 1/8"
1'-0" x 6'-8"	12"	6 3/16"	2 29/32"	1 5/8"

AVALON BIFOLD OAK GRAIN 6'-8"

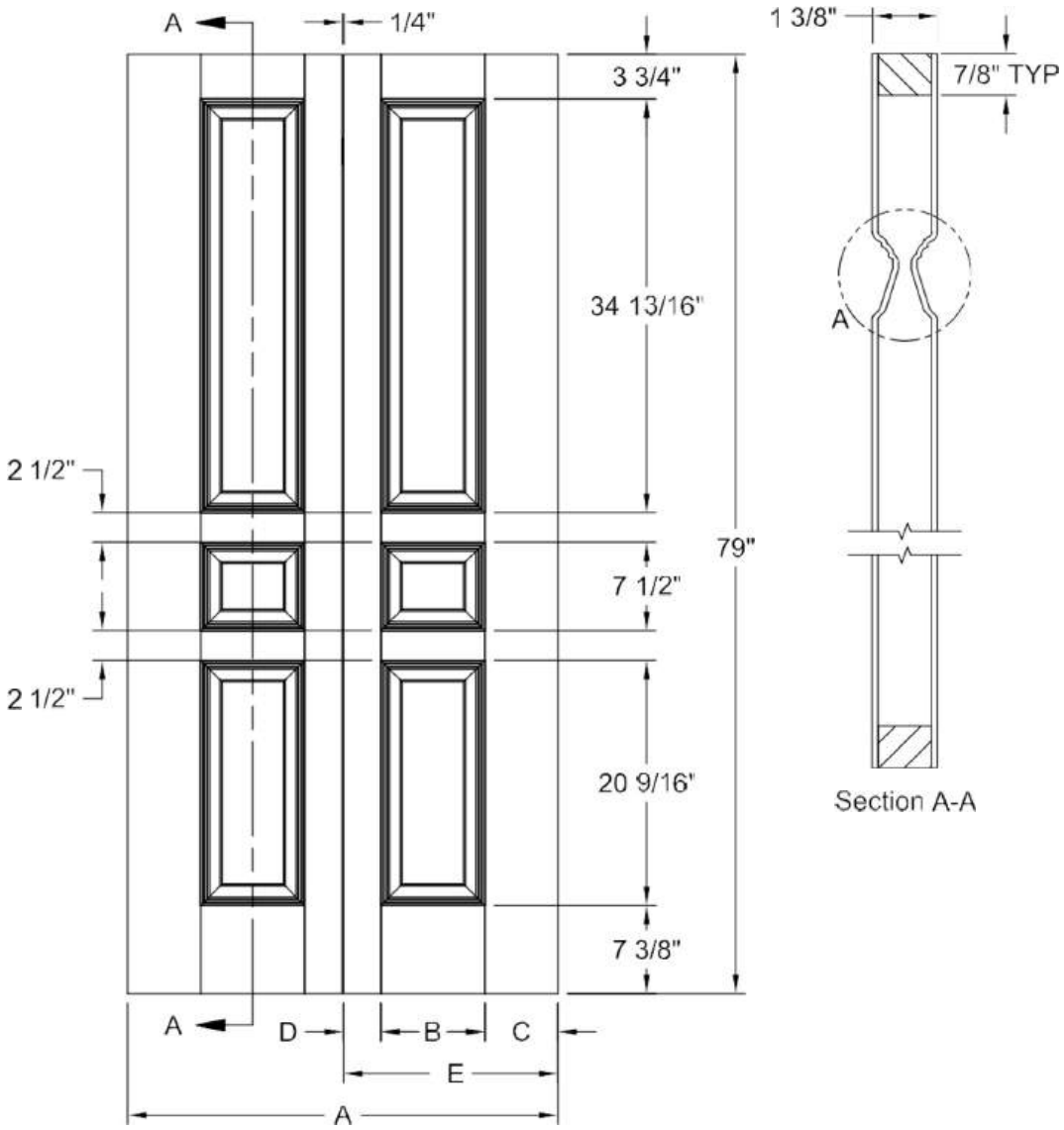

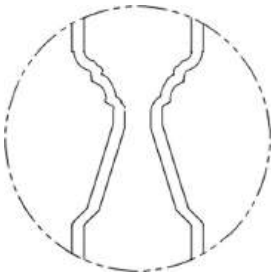

Detail A
Cove & Bead
Sticking

Dimension Table					
Door Size	A	B	C	D	E
3'-0" x 6'-8"	36"	8 3/4"	6 1/8"	3 1/8"	17 7/8"
2'-10" x 6'-8"	34"	8 3/4"	5 1/8"	3 1/8"	16 7/8"
2'-8" x 6'-8"	32"	8 3/4"	4 1/8"	3 1/8"	15 7/8"
2'-6" x 6'-8"	30"	7 11/16"	4 3/4"	2 9/16"	14 7/8"
2'-4" x 6'-8"	28"	7 11/16"	3 3/4"	2 9/16"	13 7/8"
2'-2" x 6'-8"	26"	7 11/16"	2 3/4"	2 9/16"	12 7/8"
2'-0" x 6'-8"	24"	6 3/16"	3 3/4"	2 1/16"	11 7/8"
1'-10" x 6'-8"	22"	6 3/16"	2 3/4"	2 1/16"	10 7/8"

AVALON OAK GRAIN 7'-0"

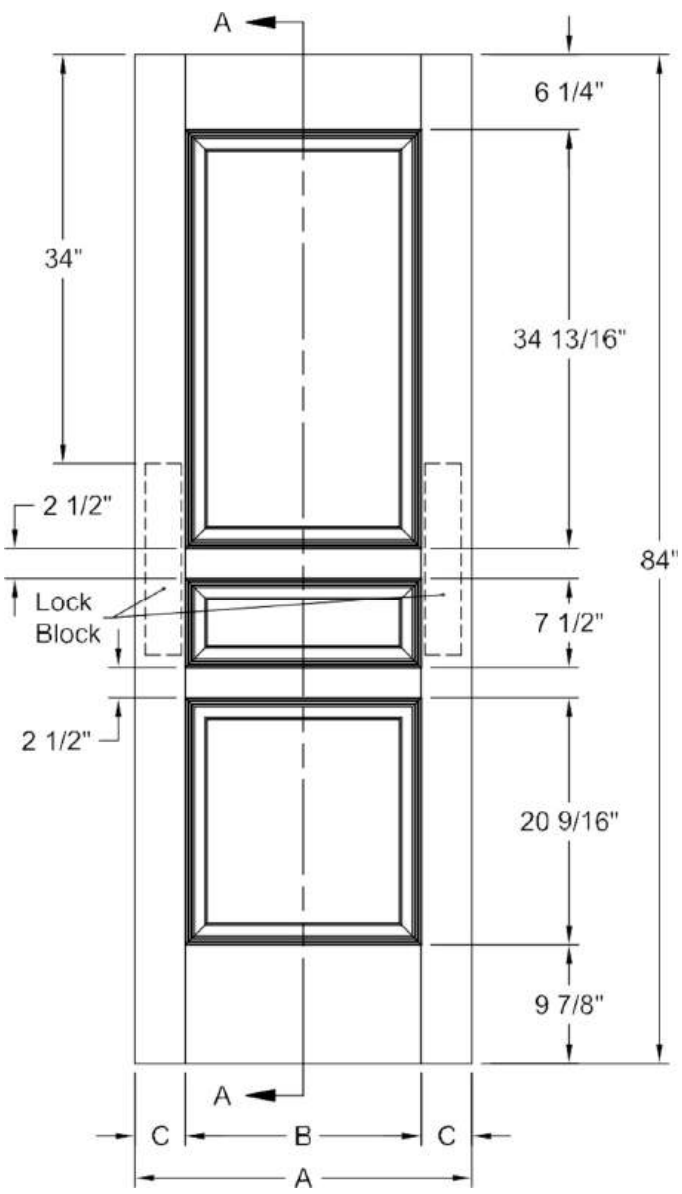

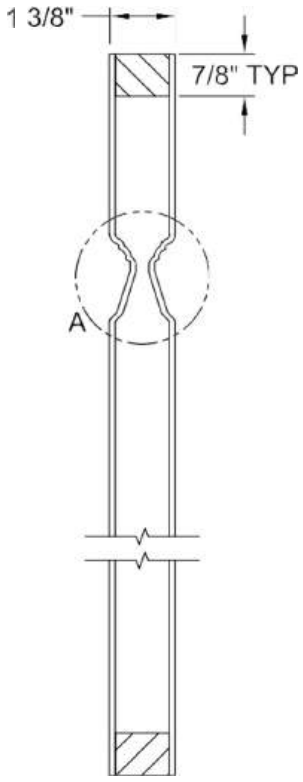

Section A-A

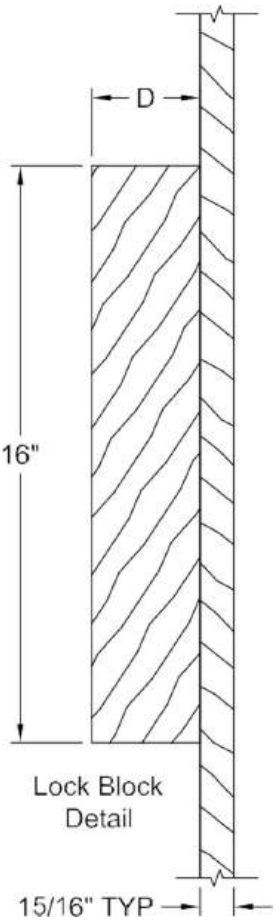

Lock Block
Detail

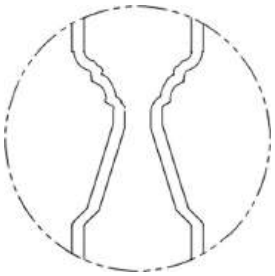

Detail A
Cove & Bead
Sticking

Dimension Table				
Door Size	A	B	C	D
3'-0" x 7'-0"	36"	27 5/8"	4 3/16"	3"
2'-10" x 7'-0"	34"	23 5/8"	5 3/16"	3"
2'-8" x 7'-0"	32"	23 5/8"	4 3/16"	3"
2'-6" x 7'-0"	30"	21 5/8"	4 3/16"	3"
2'-4" x 7'-0"	28"	19 5/8"	4 3/16"	3"
2'-2" x 7'-0"	26"	19 5/8"	3 3/16"	2 1/8"
2'-0" x 7'-0"	24"	15 5/8"	4 3/16"	3"
1'-10" x 7'-0"	22"	15 5/8"	3 3/16"	2 1/8"
1'-8" x 7'-0"	20"	8 3/4"	5 5/8"	3"
1'-6" x 7'-0"	18"	8 3/4"	4 5/8"	3"
1'-4" x 7'-0"	16"	7 11/16"	4 5/32"	3"
1'-3" x 7'-0"	15"	7 11/16"	3 21/32"	2 1/8"
1'-2" x 7'-0"	14"	7 11/16"	3 5/32"	2 1/8"
1'-0" x 7'-0"	12"	6 3/16"	2 29/32"	1 5/8"

AVALON BIFOLD OAK GRAIN 7'-0"

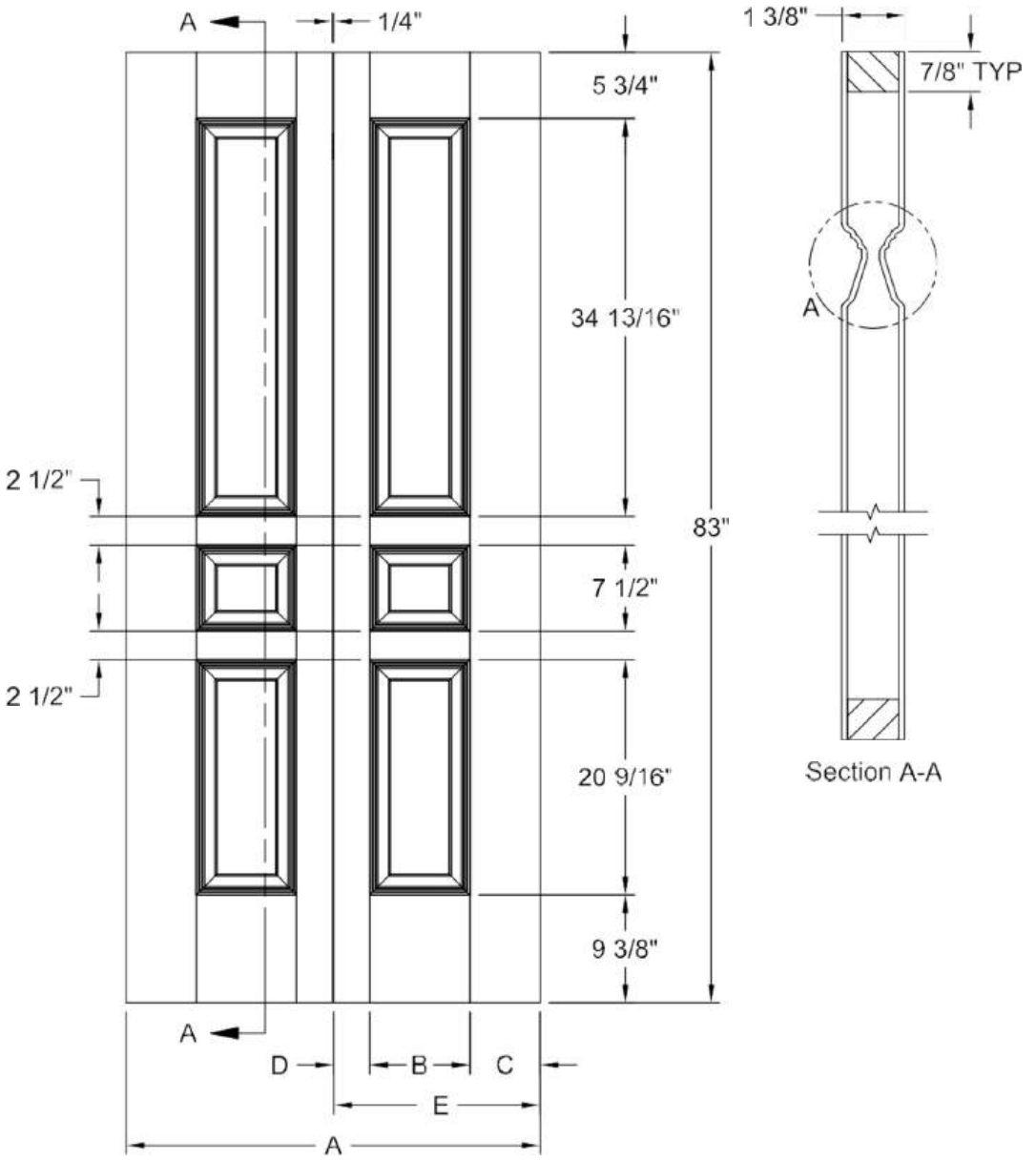

Section A-A

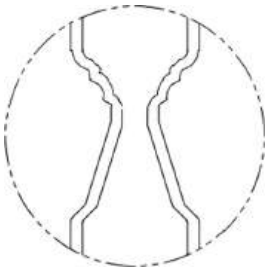

Detail A
Cove & Bead
Sticking

Dimension Table

Door Size	A	B	C	D	E
3'-0" x 7'-0"	36"	8 3/4"	6 1/8"	3 1/8"	17 7/8"
2'-10" x 7'-0"	34"	8 3/4"	5 1/8"	3 1/8"	16 7/8"
2'-8" x 7'-0"	32"	8 3/4"	4 1/8"	3 1/8"	15 7/8"
2'-6" x 7'-0"	30"	7 11/16"	4 3/4"	2 9/16"	14 7/8"
2'-4" x 7'-0"	28"	7 11/16"	3 3/4"	2 9/16"	13 7/8"
2'-2" x 7'-0"	26"	7 11/16"	2 3/4"	2 9/16"	12 7/8"
2'-0" x 7'-0"	24"	6 3/16"	3 3/4"	2 1/16"	11 7/8"
1'-10" x 7'-0"	22"	6 3/16"	2 3/4"	2 1/16"	10 7/8"

BIRKDALE 3 PANEL SMOOTH 6'-8"

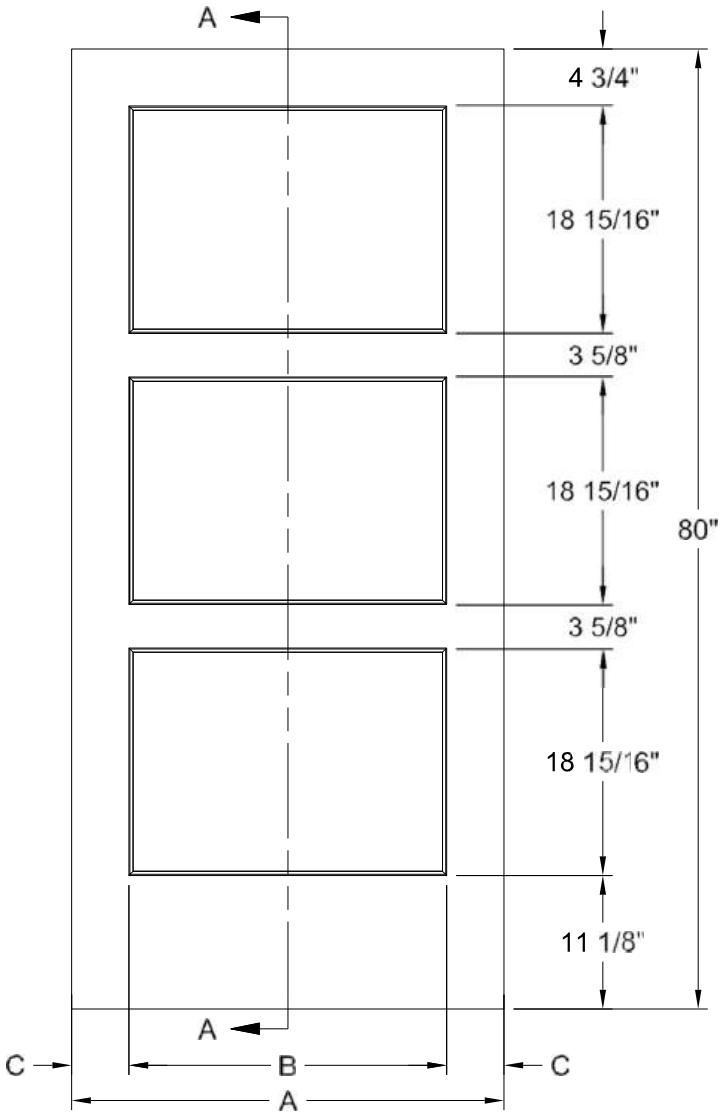

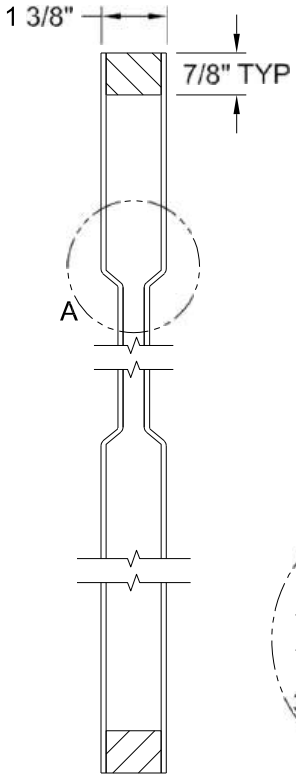

Section A-A

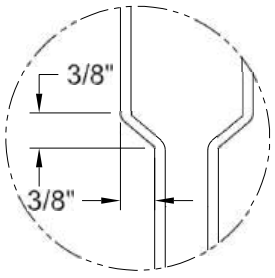

Detail A
Craftsman Sticking

DIMENSION TABLE			
Door Size	A	B	C
3'-0" x 6'-8"	36"	26 1/2"	4 3/4"
2'-10" x 6'-8"	34"	22 1/2"	5 3/4"
2'-8" x 6'-8"	32"	22 1/2"	4 3/4"
2'-6" x 6'-8"	30"	20 1/2"	4 3/4"
2'-4" x 6'-8"	28"	18 1/2"	4 3/4"
2'-2" x 6'-8"	26"	15 1/2"	5 1/4"
2'-0" x 6'-8"	24"	15 1/2"	4 1/4"
1'-10" x 6'-8"	22"	11 1/2"	5 1/4"
1'-8" x 6'-8"	20"	11 1/2"	4 1/4"

BIRKDALE 3 PANEL SMOOTH 6'-8"

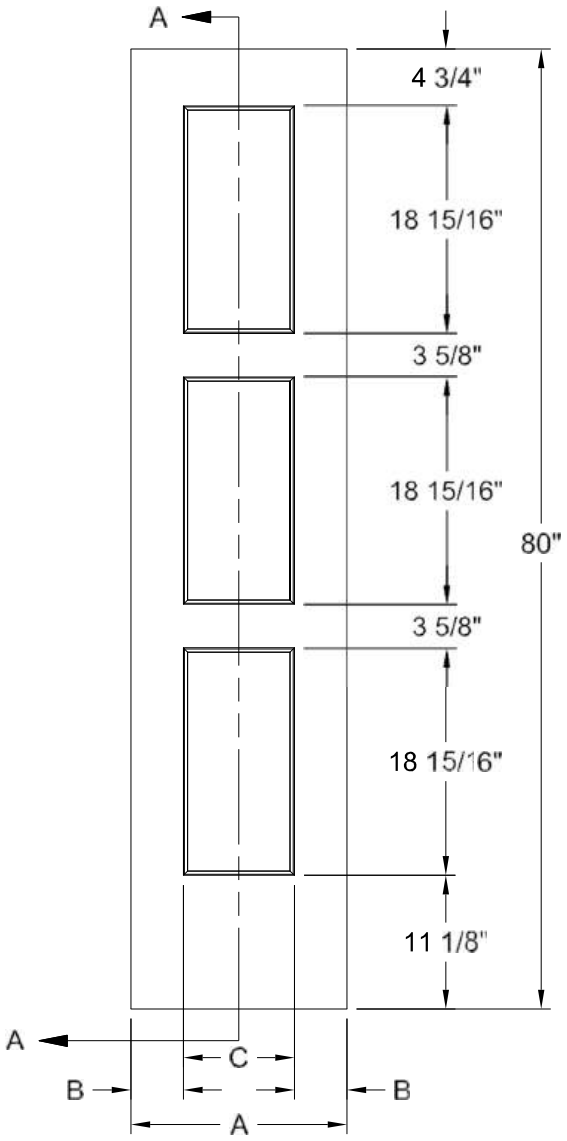

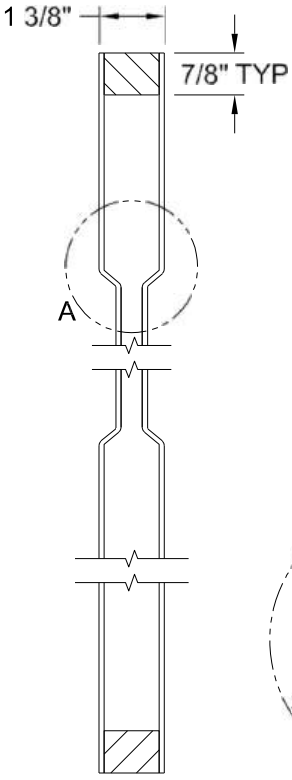

Section A-A

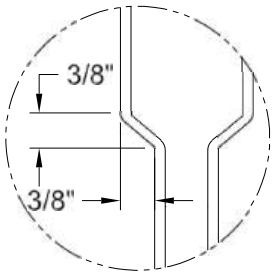

Detail A
Craftsman Sticking

DIMENSION TABLE			
Door Size	A	B	C
1'-6" x 6'-8"	18"	4 3/8"	9 1/4"
1'-4" x 6'-8"	16"	3 3/8"	9 1/4"
1'-3" x 6'-8"	15"	3 3/4"	7 1/2"
1'-2" x 6'-8"	14"	3 1/4"	7 1/2"
1'-0" x 6'-8"	12"	3"	6"

BIRKDALE 6 PANEL BIFOLD SMOOTH 6'-8"

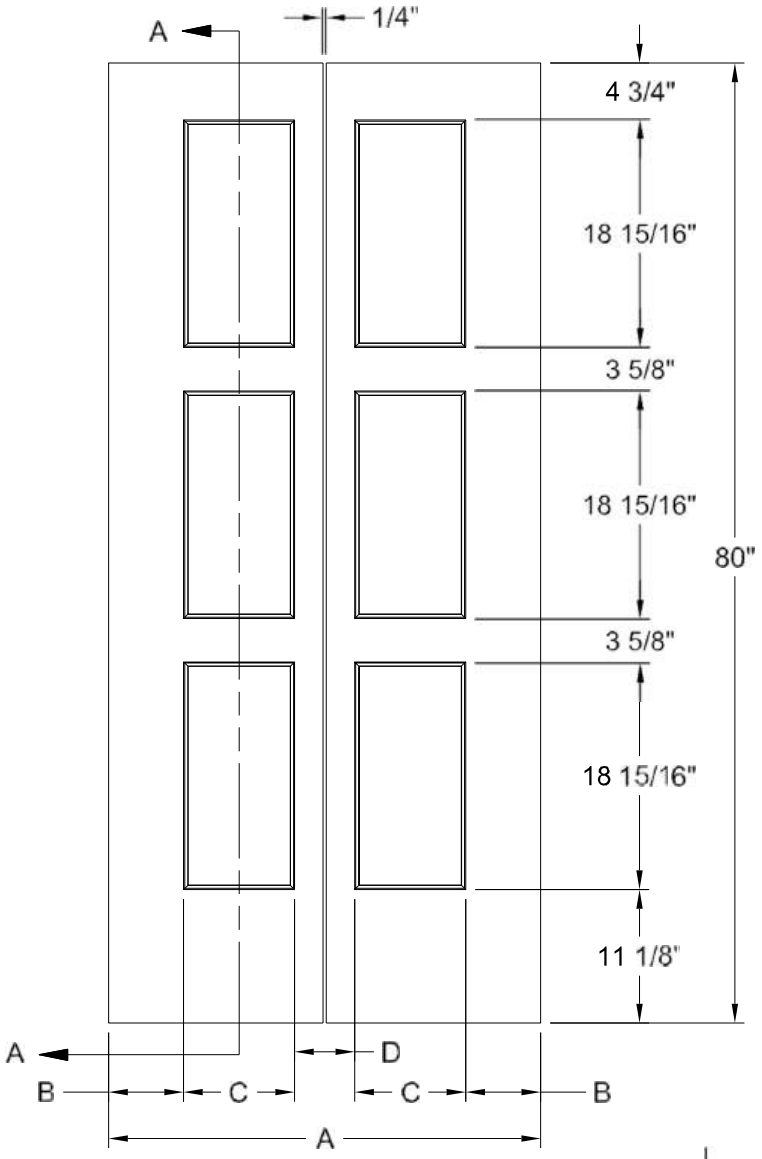

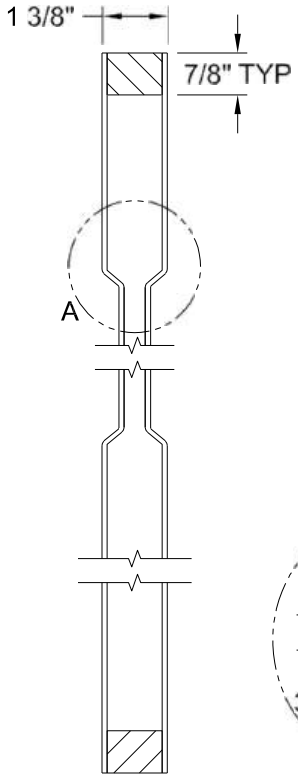

Section A-A

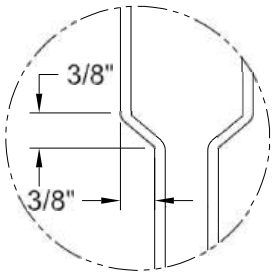

Detail A
Craftsman Sticking

DIMENSION TABLE

Door Size	A	B	C	D
3'-0" x 6'-8"	36"	6 1/4"	9 1/4"	5"
2'-10" x 6'-8"	34"	5 1/4"	9 1/4"	5"
2'-8" x 6'-8"	32"	4 1/4"	9 1/4"	5"
2'-6" x 6'-8"	30"	5 1/4"	7 1/2"	4 1/2"
2'-4" x 6'-8"	28"	4 1/4"	7 1/2"	4 1/2"
2'-2" x 6'-8"	26"	3 1/4"	7 1/2"	4 1/2"
2'-0" x 6'-8"	24"	4 1/4"	6"	3 1/2"
1'-10" x 6'-8"	22"	3 1/4"	6"	3 1/2"

BIRKDALE 3 PANEL SMOOTH 7'-0"

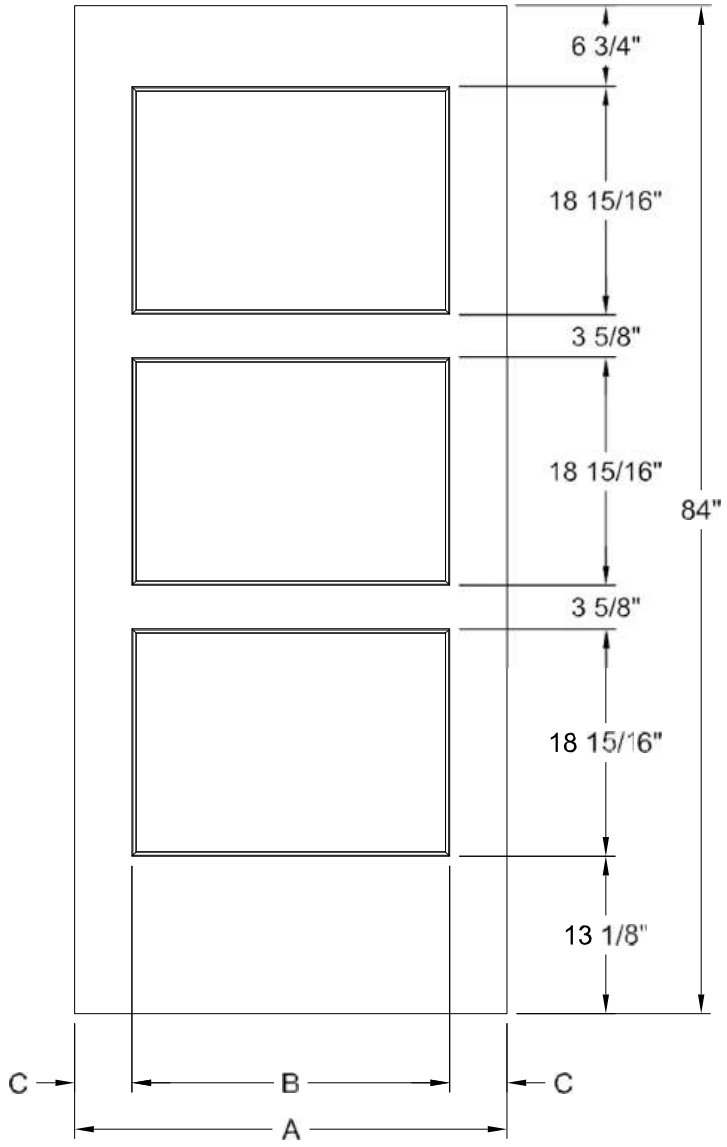

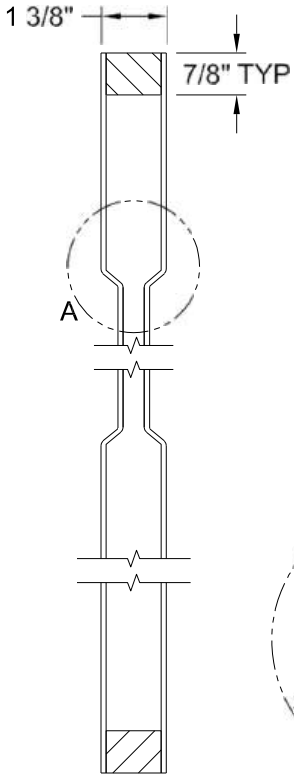

Section A-A

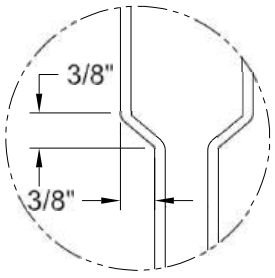

Detail A
Craftsman Sticking

DIMENSION TABLE

Door Size	A	B	C
3'-0" x 7'-0"	36"	26 1/2"	4 3/4"
2'-10" x 7'-0"	34"	22 1/2"	5 3/4"
2'-8" x 7'-0"	32"	22 1/2"	4 3/4"
2'-6" x 7'-0"	30"	20 1/2"	4 3/4"
2'-4" x 7'-0"	28"	18 1/2"	4 3/4"
2'-2" x 7'-0"	26"	15 1/2"	5 1/4"
2'-0" x 7'-0"	24"	15 1/2"	4 1/4"
1'-10" x 7'-0"	22"	11 1/2"	5 1/4"
1'-8" x 7'-0"	20"	11 1/2"	4 1/4"

BIRKDALE 3 PANEL SMOOTH 7'-0"

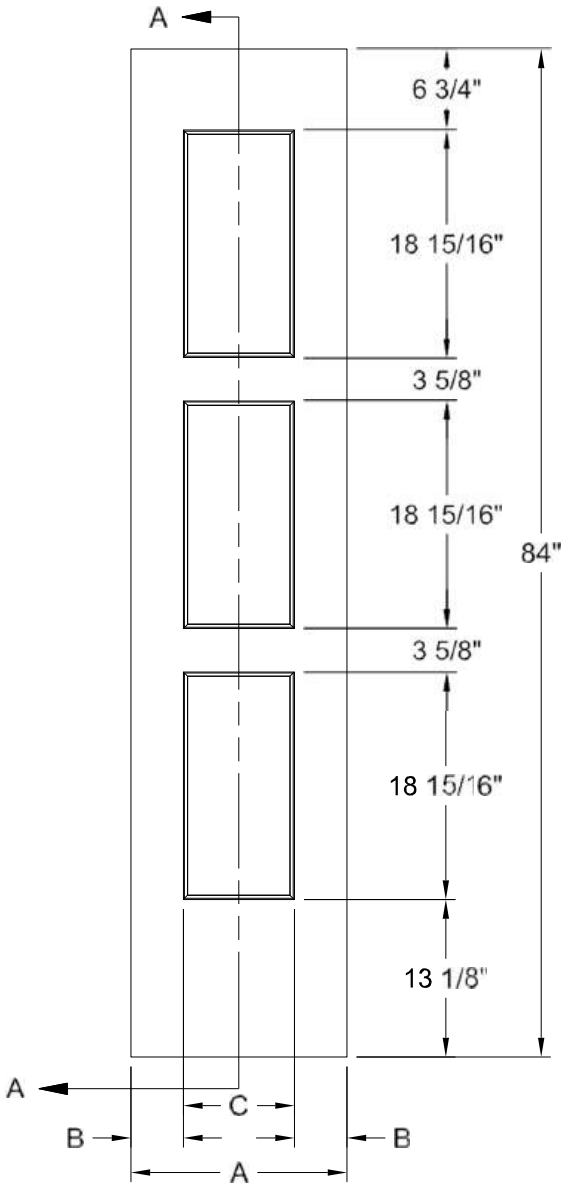

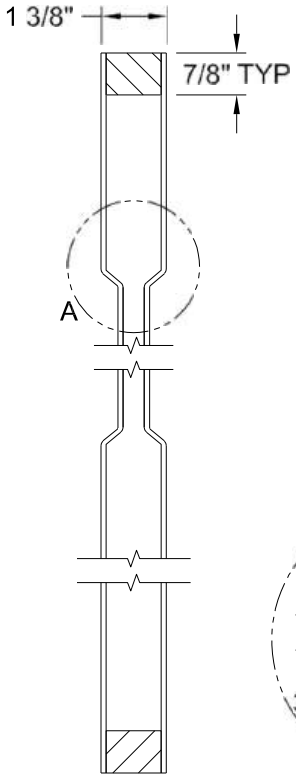

Section A-A

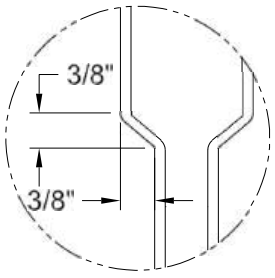

Detail A
Craftsman Sticking

DIMENSION TABLE			
Door Size	A	B	C
1'-6" x 7'-0"	18"	4 3/8"	9 1/4"
1'-4" x 7'-0"	16"	3 3/8"	9 1/4"
1'-3" x 7'-0"	15"	3 3/4"	7 1/2"
1'-2" x 7'-0"	14"	3 1/4"	7 1/2"
1'-0" x 7'-0"	12"	3"	6"

BIRKDALE 6 PANEL BIFOLD SMOOTH 7'-0"

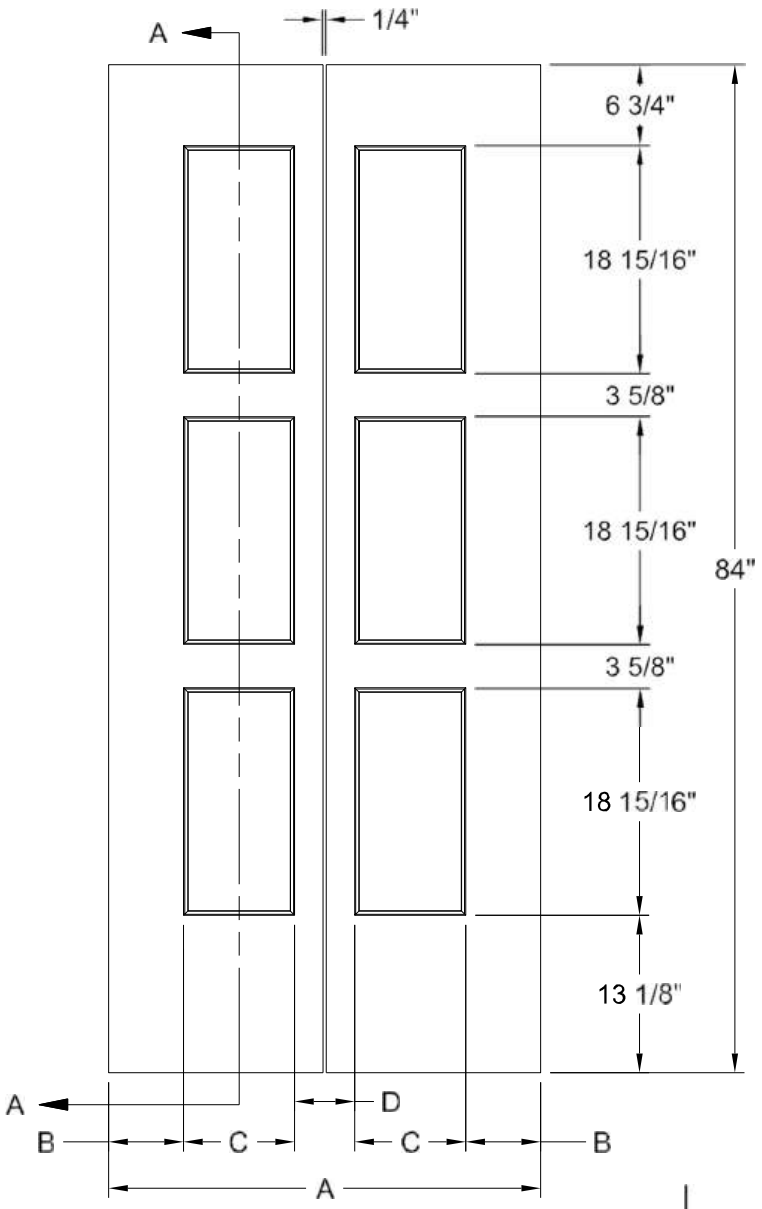

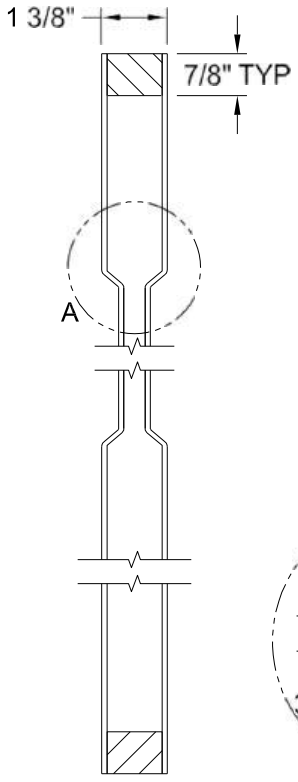

Section A-A

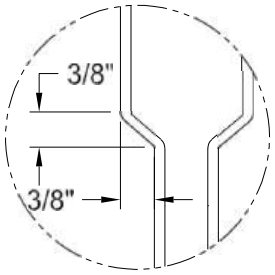

Detail A
Craftsman Sticking

DIMENSION TABLE

Door Size	A	B	C	D
3'-0" x 7'-0"	36"	6 1/4"	9 1/4"	5"
2'-10" x 7'-0"	34"	5 1/4"	9 1/4"	5"
2'-8" x 7'-0"	32"	4 1/4"	9 1/4"	5"
2'-6" x 7'-0"	30"	5 1/4"	7 1/2"	4 1/2"
2'-4" x 7'-0"	28"	4 1/4"	7 1/2"	4 1/2"
2'-2" x 7'-0"	26"	3 1/4"	7 1/2"	4 1/2"
2'-0" x 7'-0"	24"	4 1/4"	6"	3 1/2"
1'-10" x 7'-0"	22"	3 1/4"	6"	3 1/2"

BIRKDALE 3 PANEL SMOOTH 8'-0"

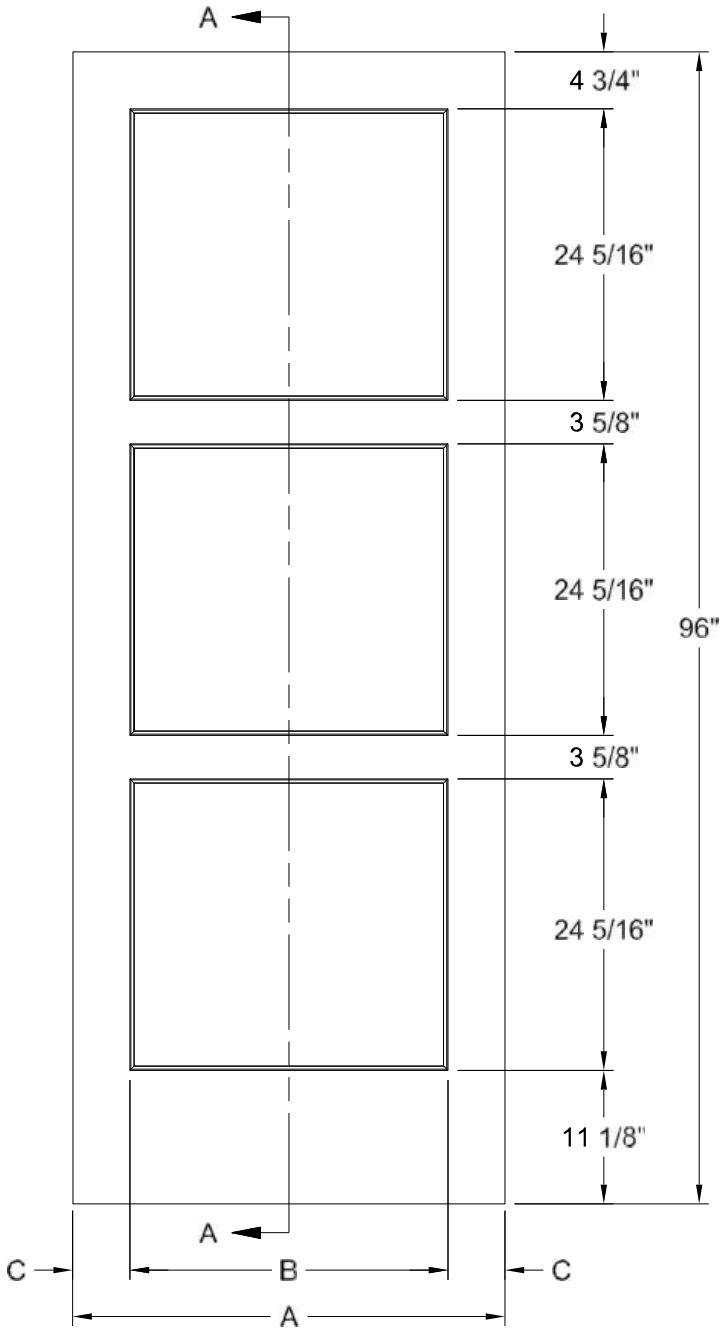

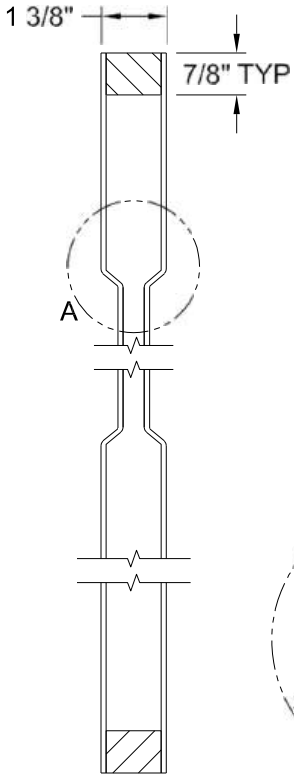

Section A-A

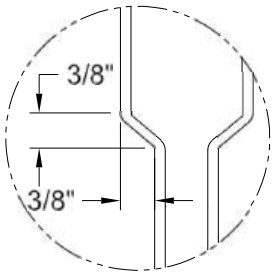

Detail A
Craftsman Sticking

DIMENSION TABLE

Door Size	A	B	C
3'-0" x 8'-0"	36"	26 1/2"	4 3/4"
2'-10" x 8'-0"	34"	22 1/2"	5 3/4"
2'-8" x 8'-0"	32"	22 1/2"	4 3/4"
2'-6" x 8'-0"	30"	20 1/2"	4 3/4"
2'-4" x 8'-0"	28"	18 1/2"	4 3/4"
2'-2" x 8'-0"	26"	15 1/2"	5 1/4"
2'-0" x 8'-0"	24"	15 1/2"	4 1/4"
1'-10" x 8'-0"	22"	11 1/2"	5 1/4"
1'-8" x 8'-0"	20"	11 1/2"	4 1/4"

BIRKDALE 3 PANEL SMOOTH 8'-0"

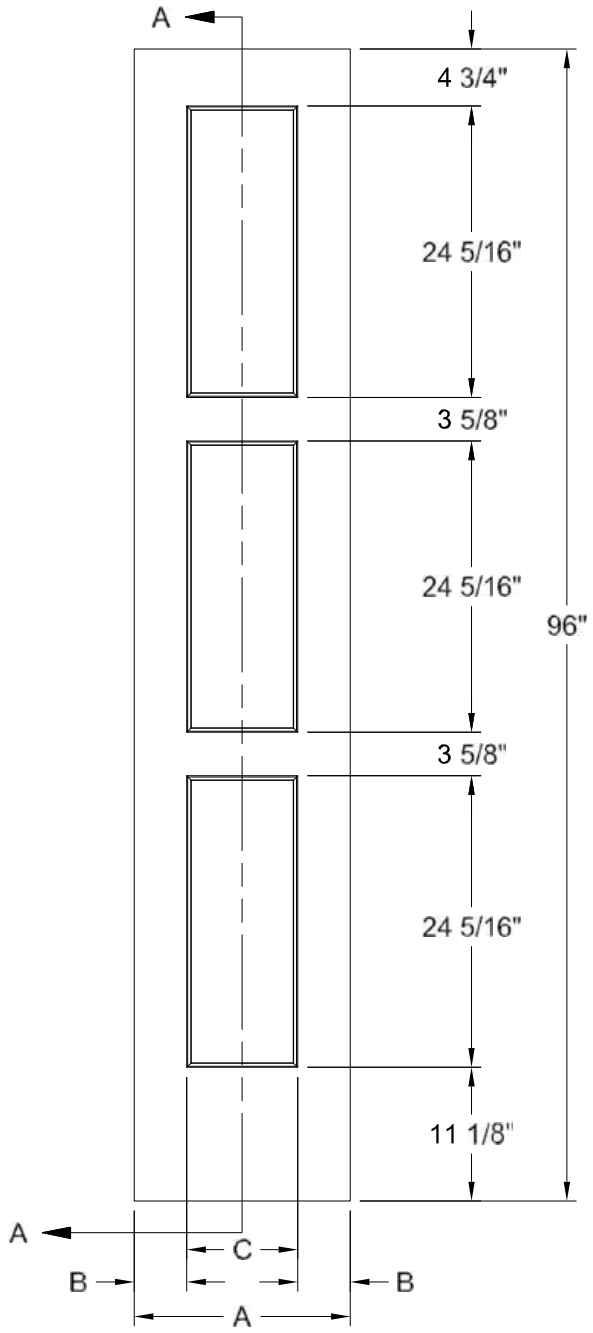

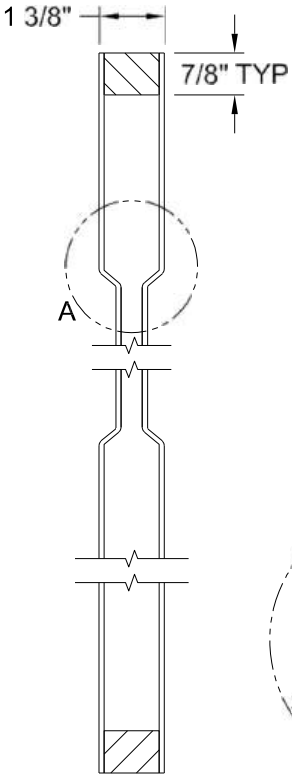

Section A-A

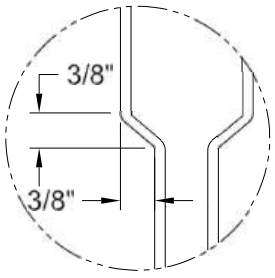

Detail A
Craftsman Sticking

DIMENSION TABLE

Door Size	A	B	C
1'-6" x 8'-0"	18"	4 3/8"	9 1/4"
1'-4" x 8'-0"	16"	3 3/8"	9 1/4"
1'-3" x 8'-0"	15"	3 3/4"	7 1/2"
1'-2" x 8'-0"	14"	3 1/4"	7 1/2"
1'-0" x 8'-0"	12"	3"	6"

BIRKDALE 6 PANEL BIFOLD SMOOTH 8'-0"

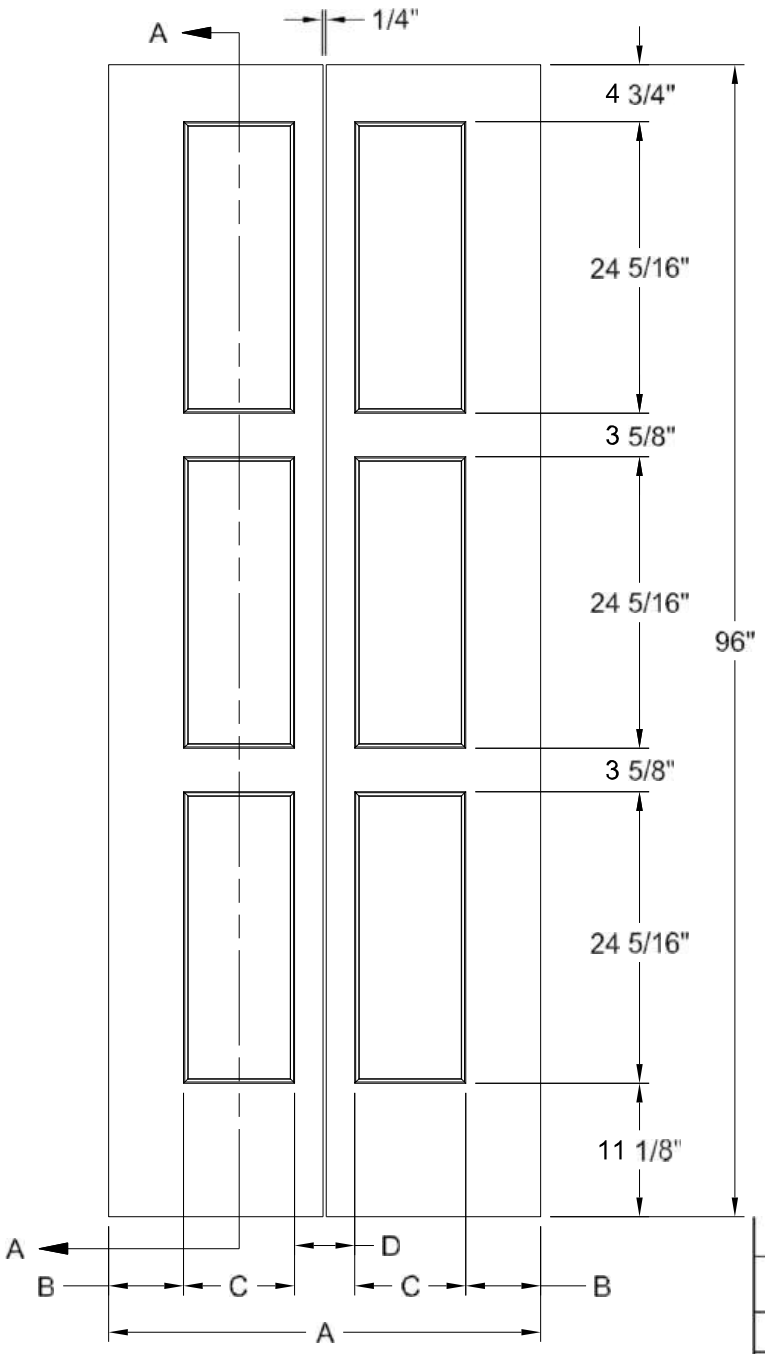

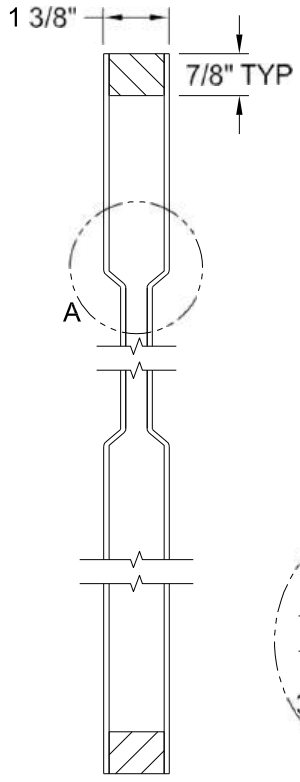

Section A-A

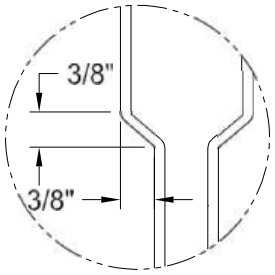

Detail A
Craftsman Sticking

DIMENSION TABLE

Door Size	A	B	C	D
3'-0" x 8'-0"	36"	6 1/4"	9 1/4"	5"
2'-10" x 8'-0"	34"	5 1/4"	9 1/4"	5"
2'-8" x 8'-0"	32"	4 1/4"	9 1/4"	5"
2'-6" x 8'-0"	30"	5 1/4"	7 1/2"	4 1/2"
2'-4" x 8'-0"	28"	4 1/4"	7 1/2"	4 1/2"
2'-2" x 8'-0"	26"	3 1/4"	7 1/2"	4 1/2"
2'-0" x 8'-0"	24"	4 1/4"	6"	3 1/2"
1'-10" x 8'-0"	22"	3 1/4"	6"	3 1/2"

CAIMAN SMOOTH 6'-8"

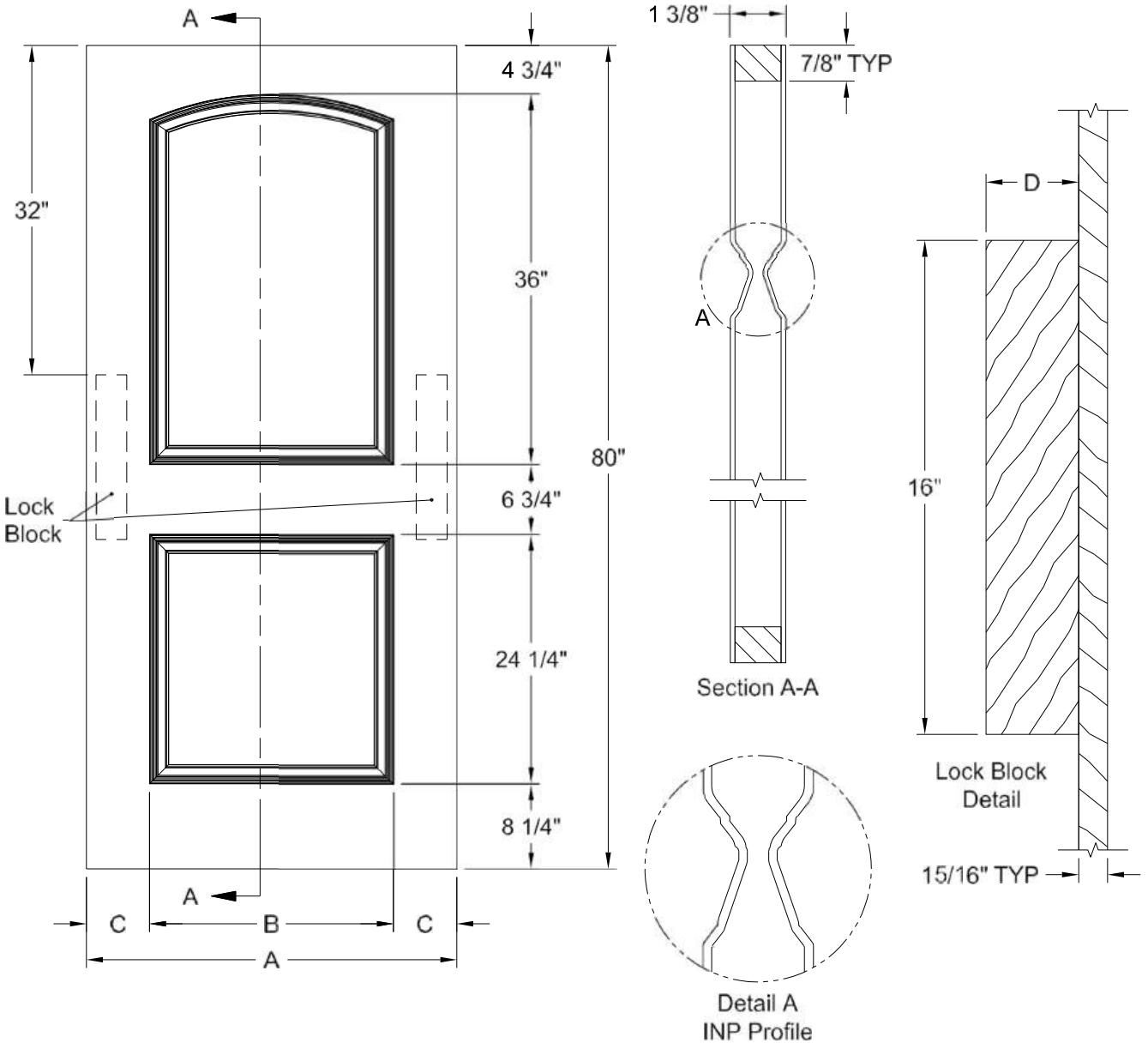

Dimension Table				
Door Size	A	B	C	D
3'-0" x 6'-8"	36"	23 3/4"	6 1/8"	3"
2'-10" x 6'-8"	34"	21 3/4"	6 1/8"	3"
2'-8" x 6'-8"	32"	21 3/4"	5 1/8"	3"
2'-6" x 6'-8"	30"	19 3/4"	5 1/8"	3"
2'-4" x 6'-8"	28"	17 3/4"	5 1/8"	3"
2'-2" x 6'-8"	26"	15 3/4"	5 1/8"	3"
2'-0" x 6'-8"	24"	15 3/4"	4 1/8"	3"
1'-10" x 6'-8"	22"	15 3/4"	3 1/8"	2 1/8"

CAIMAN SMOOTH 6'-8"

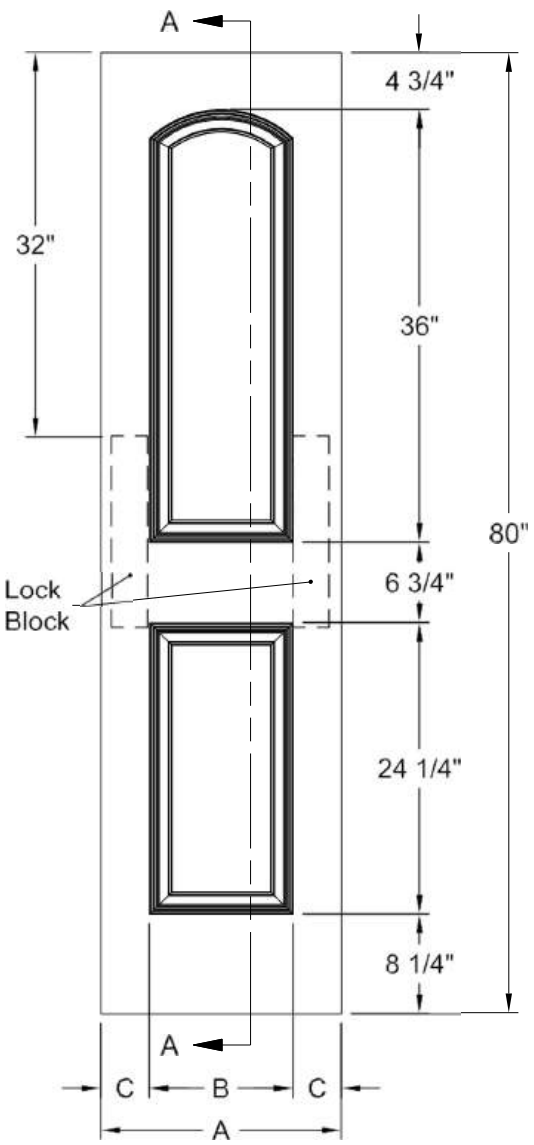

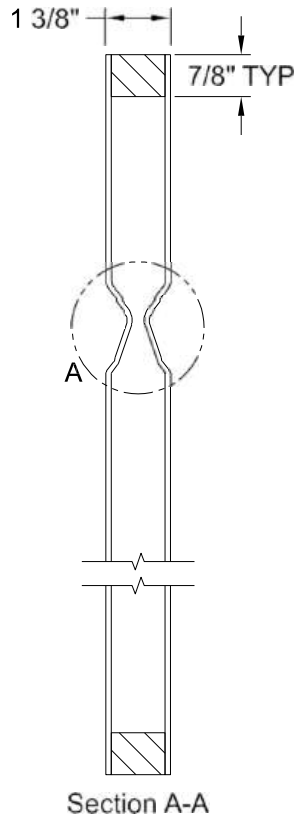

Section A-A

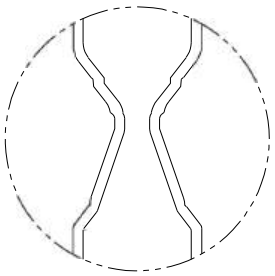

Detail A
INP Profile

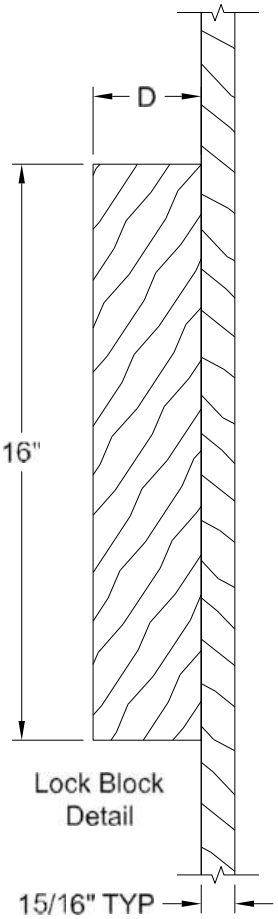

Lock Block
Detail

Dimension Table				
Door Size	A	B	C	D
1'-8" x 6'-8"	20"	12"	4"	3"
1'-6" x 6'-8"	18"	12"	3"	2 1/8"
1'-4" x 6'-8"	16"	7"	4 1/2"	3"
1'-3" x 6'-8"	15"	7"	4"	2 11/16"
1'-2" x 6'-8"	14"	7"	3 1/2"	2 1/8"
1'-0" x 6'-8"	12"	7"	2 1/2"	1 3/8"

CAIMAN BIFOLD SMOOTH 6'-8"

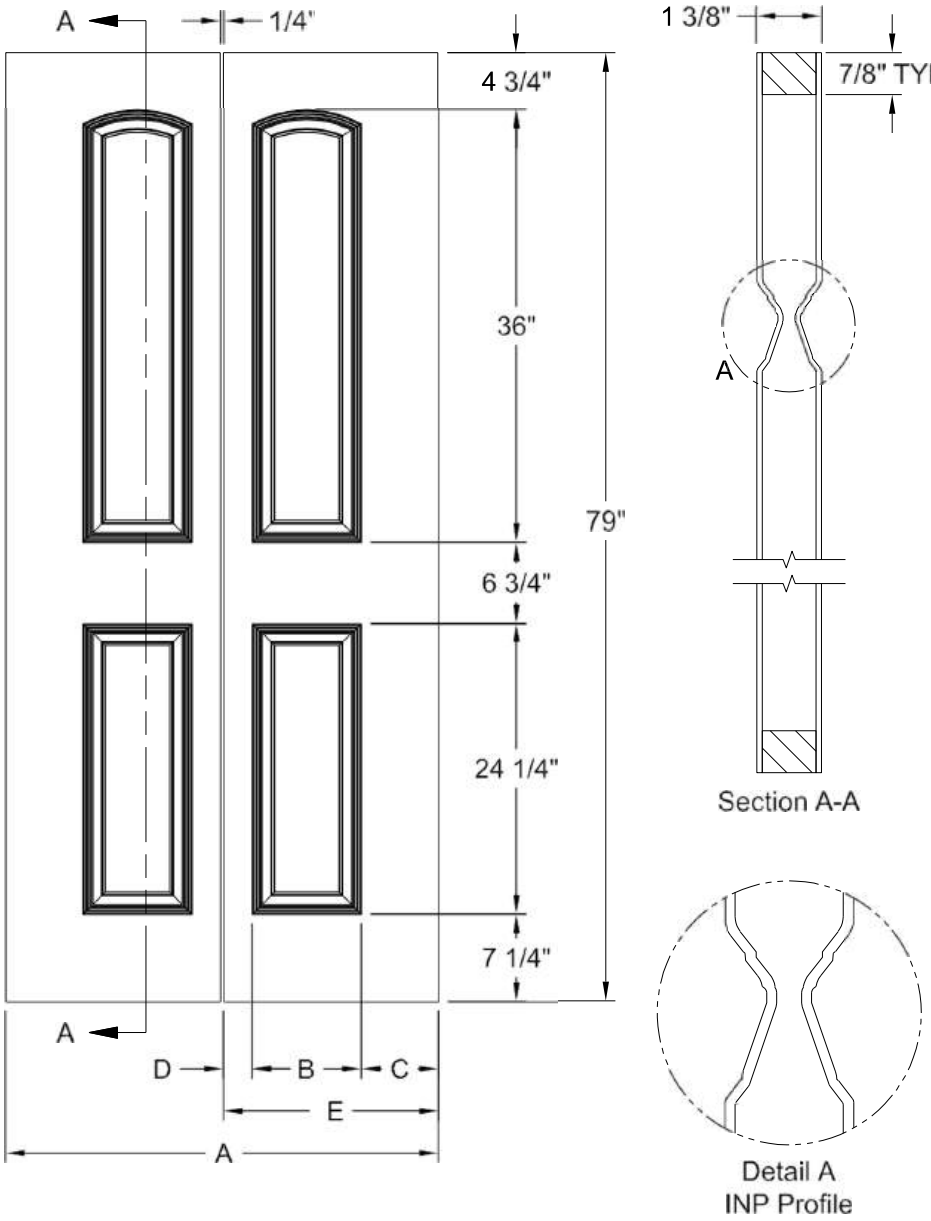

Dimension Table					
Door Size	A	B	C	D	E
3'-0" x 6'-8"	36"	9 1/16"	6 7/16"	2 3/8"	17 7/8"
2'-10" x 6'-8"	34"	9 1/16"	5 7/16"	2 3/8"	16 7/8"
2'-8" x 6'-8"	32"	9 1/16"	4 7/16"	2 3/8"	15 7/8"
2'-6" x 6'-8"	30"	9 1/16"	3 7/16"	2 3/8"	14 7/8"
2'-4" x 6'-8"	28"	9 1/16"	2 7/16"	2 3/8"	13 7/8"
2'-0" x 6'-8"	24"	6 3/4"	3 5/16"	1 13/16"	11 7/8"
1'-10" x 6'-8"	22"	6 3/4"	2 5/16"	1 13/16"	10 7/8"

CAIMAN SMOOTH 7'-0"

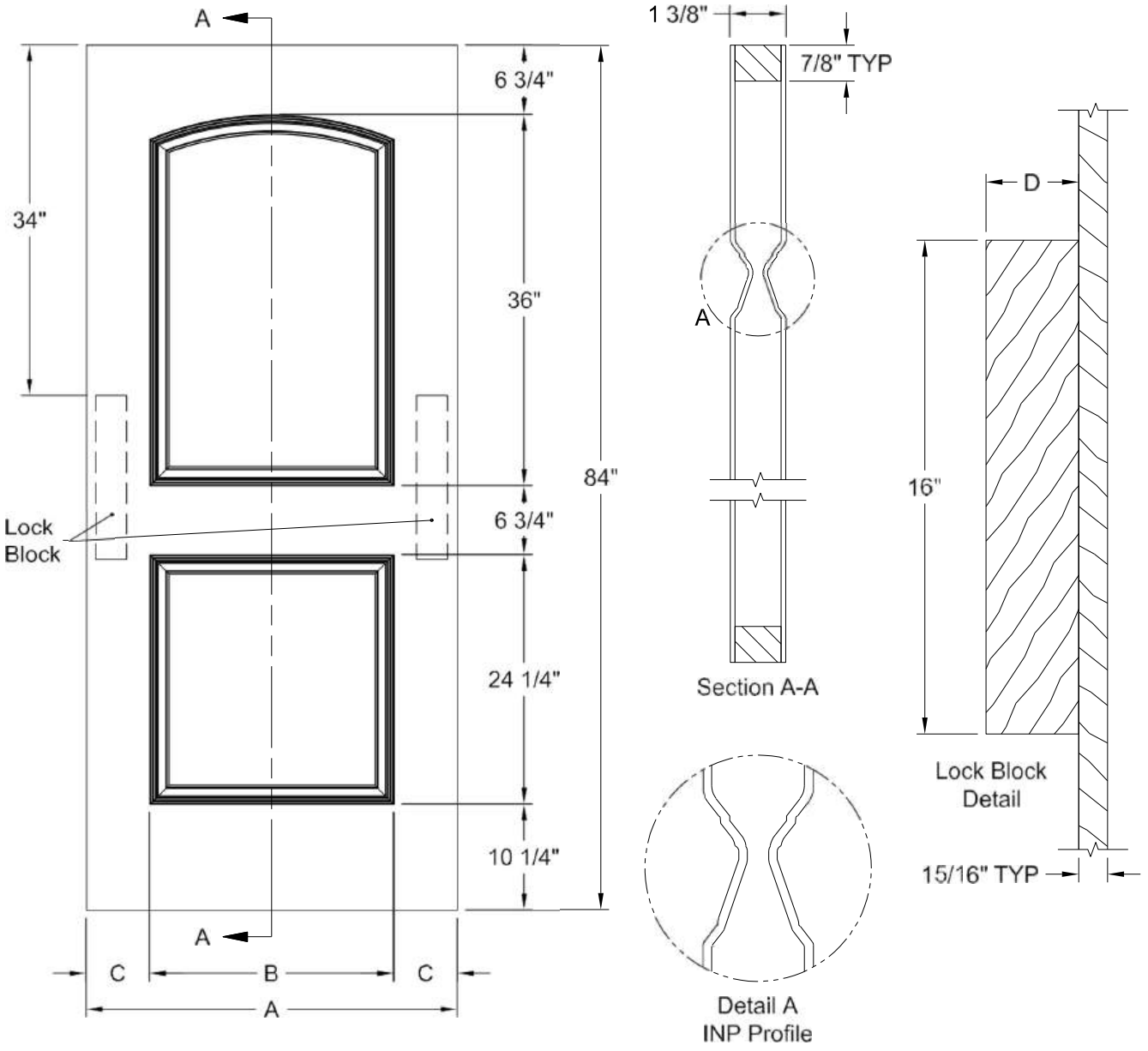

Dimension Table				
Door Size	A	B	C	D
3'-0" x 7'-0"	36"	23 5/8"	6 1/8"	3"
2'-10" x 7'-0"	34"	21 3/4"	6 1/8"	3"
2'-8" x 7'-0"	32"	21 3/4"	5 1/8"	3"
2'-6" x 7'-0"	30"	19 3/4"	5 1/8"	3"
2'-4" x 7'-0"	28"	17 3/4"	5 1/8"	3"
2'-2" x 7'-0"	26"	15 3/4"	5 1/8"	3"
2'-0" x 7'-0"	24"	15 3/4"	4 1/8"	3"
1'-10" x 7'-0"	22"	15 3/4"	3 1/8"	2 1/8"

CAIMAN SMOOTH 7'-0"

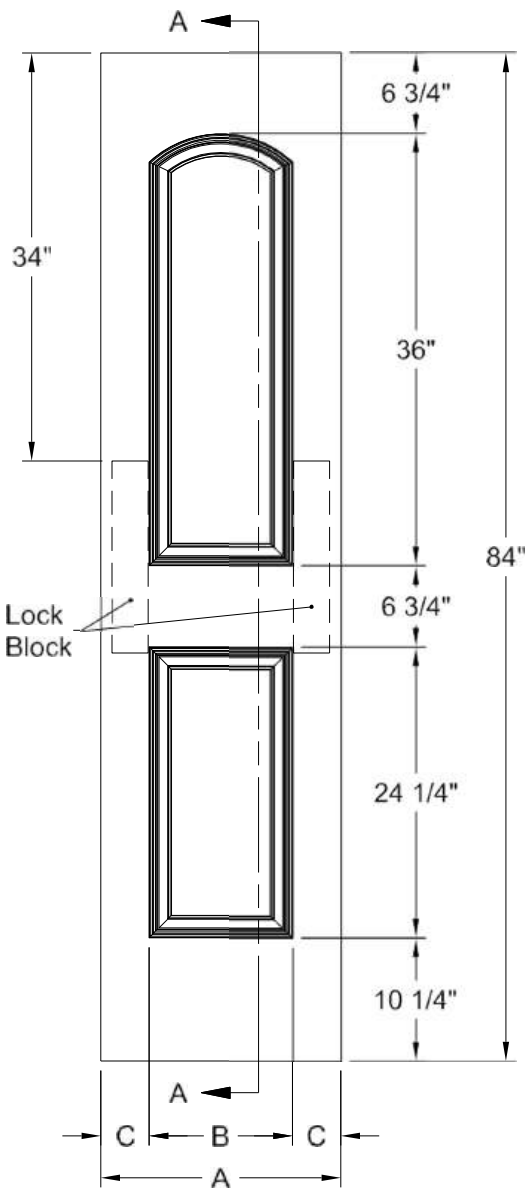

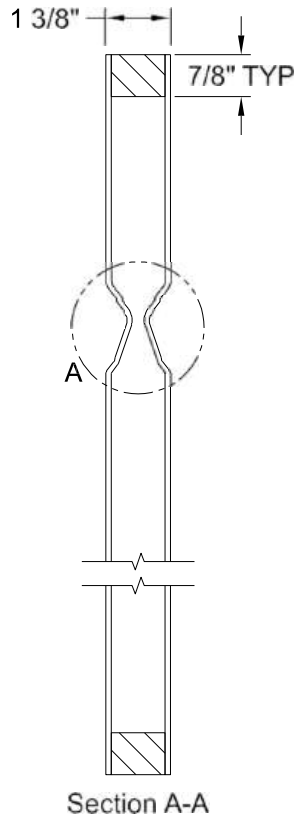

Section A-A

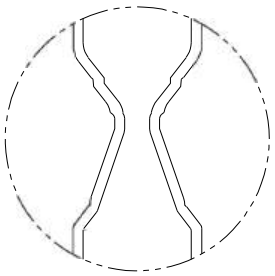

Detail A
INP Profile

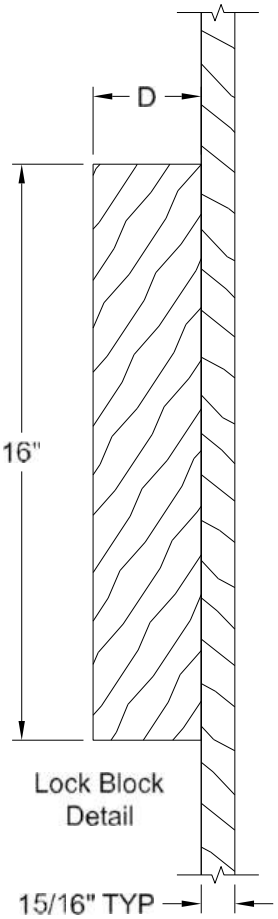

Lock Block
Detail

Dimension Table				
Door Size	A	B	C	D
1'-8" x 7'-0"	20"	12"	4"	3"
1'-6" x 7'-0"	18"	12"	3"	2 1/8"
1'-4" x 7'-0"	16"	7"	4 1/2"	3"
1'-3" x 7'-0"	15"	7"	4"	2 11/16"
1'-2" x 7'-0"	14"	7"	3 1/2"	2 1/8"
1'-0" x 7'-0"	12"	7"	2 1/2"	1 3/8"

CAIMAN BIFOLD SMOOTH 7'-0"

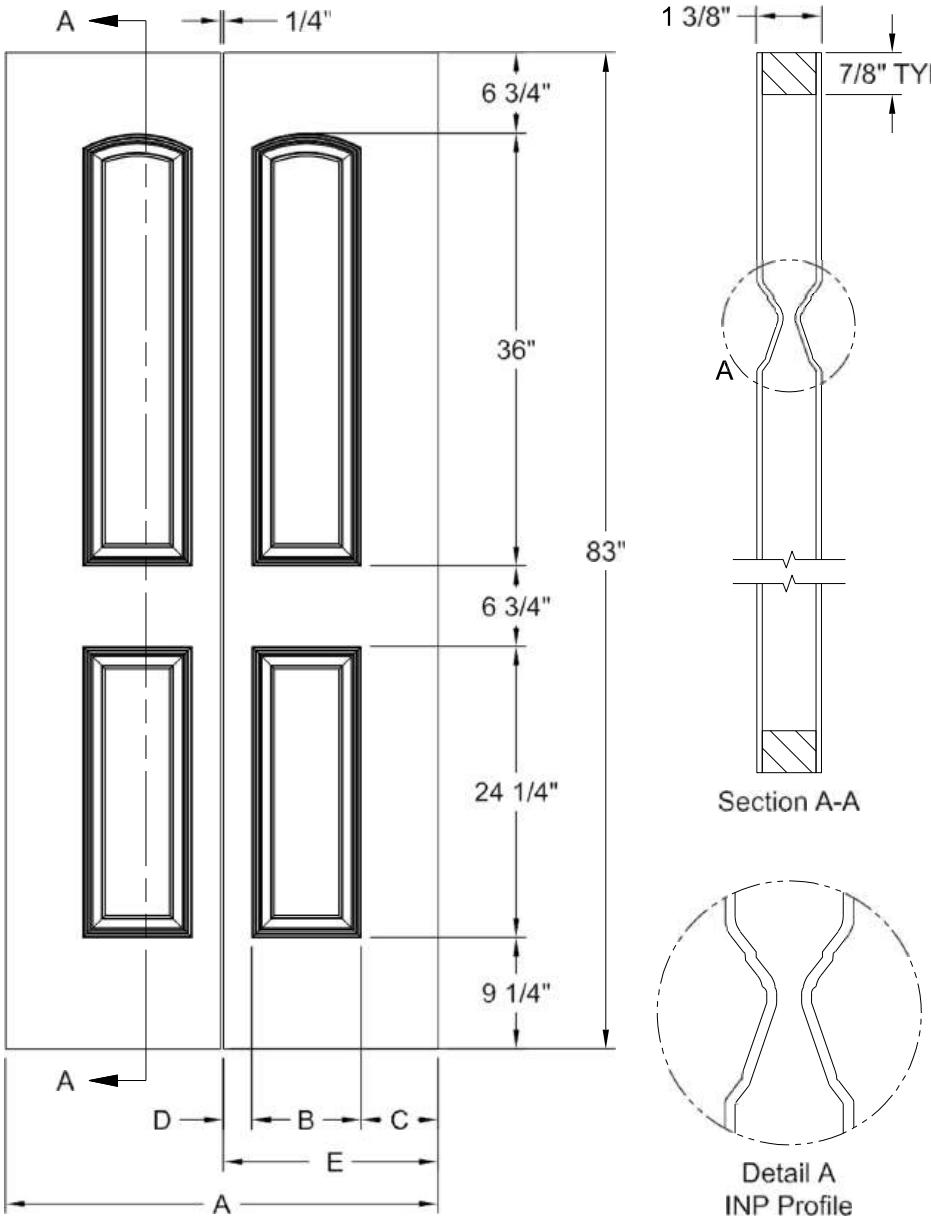

Dimension Table					
Door Size	A	B	C	D	E
3'-0" x 7'-0"	36"	9 1/16"	6 7/16"	2 3/8"	17 7/8"
2'-10" x 7'-0"	34"	9 1/16"	5 7/16"	2 3/8"	16 7/8"
2'-8" x 7'-0"	32"	9 1/16"	4 7/16"	2 3/8"	15 7/8"
2'-6" x 7'-0"	30"	9 1/16"	3 7/16"	2 3/8"	14 7/8"
2'-4" x 7'-0"	28"	9 1/16"	2 7/16"	2 3/8"	13 7/8"
2'-0" x 7'-0"	24"	6 3/4"	3 5/16"	1 13/16"	11 7/8"
1'-10" x 7'-0"	22"	6 3/4"	2 5/16"	1 13/16"	10 7/8"

CAIMAN SMOOTH 8'-0"

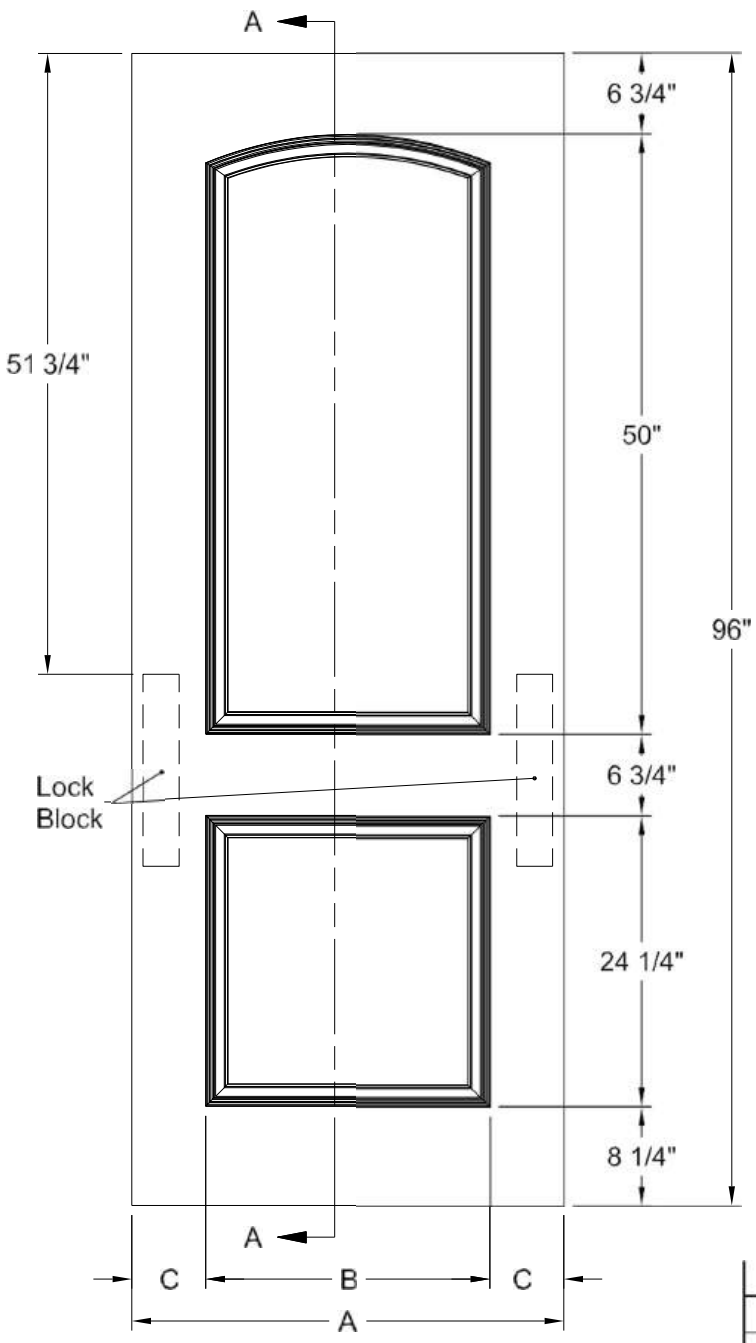

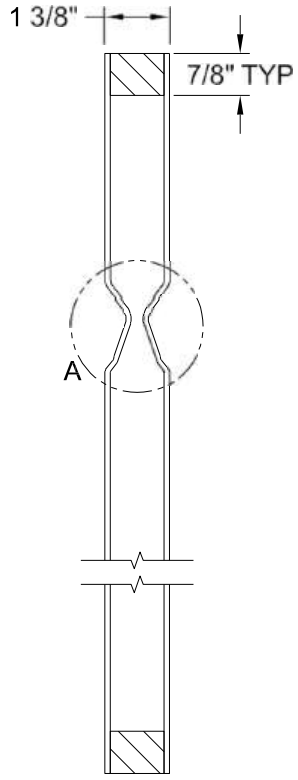

Section A-A

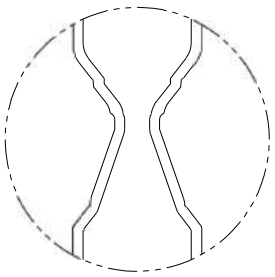

Detail A
INP Profile

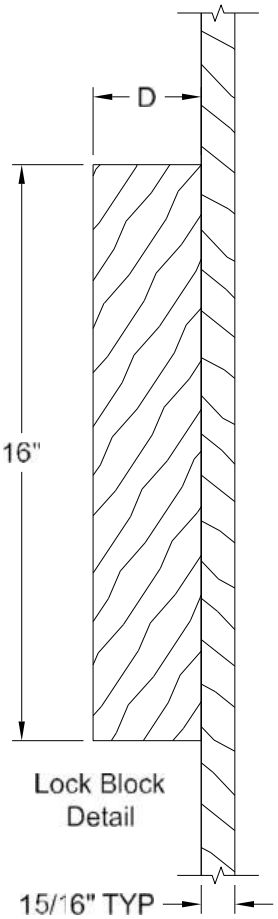

Lock Block
Detail

Dimension Table				
Door Size	A	B	C	D
3'-0" x 8'-0"	36"	23 3/4"	6 1/8"	3"
2'-10" x 8'-0"	34"	21 3/4"	6 1/8"	3"
2'-8" x 8'-0"	32"	21 3/4"	5 1/8"	3"
2'-6" x 8'-0"	30"	19 3/4"	5 1/8"	3"
2'-4" x 8'-0"	28"	17 3/4"	5 1/8"	3"
2'-2" x 8'-0"	26"	15 3/4"	5 1/8"	3"
2'-0" x 8'-0"	24"	15 3/4"	4 1/8"	3"
1'-10" x 8'-0"	22"	15 3/4"	3 1/8"	2 1/8"

CAIMAN SMOOTH 8'-0"

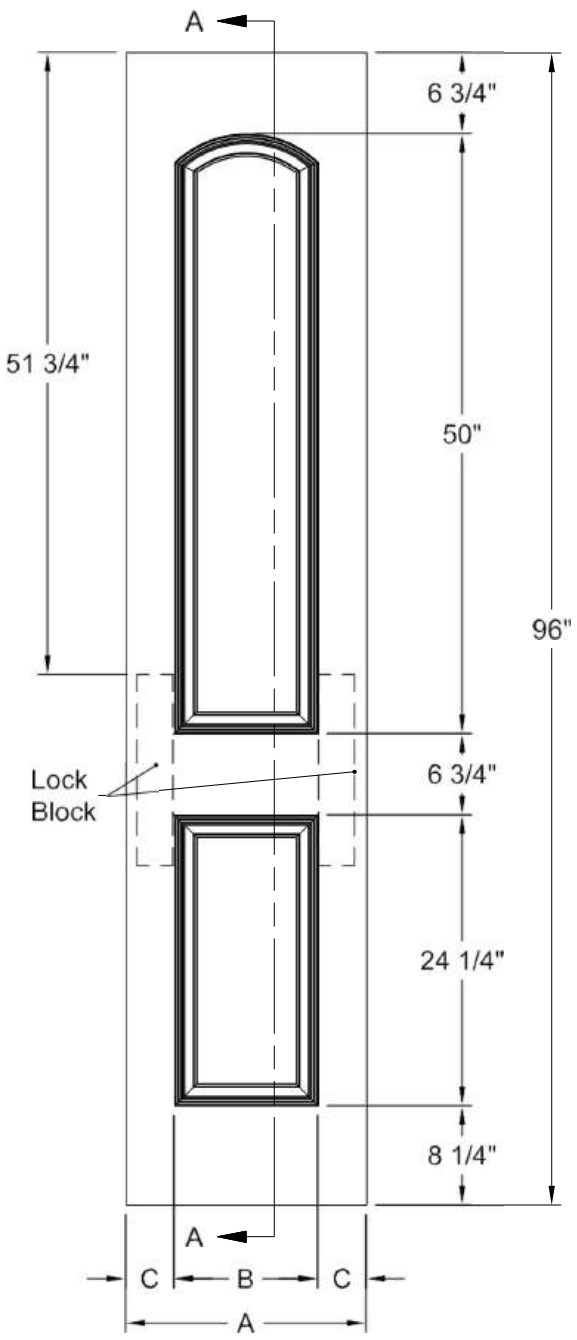

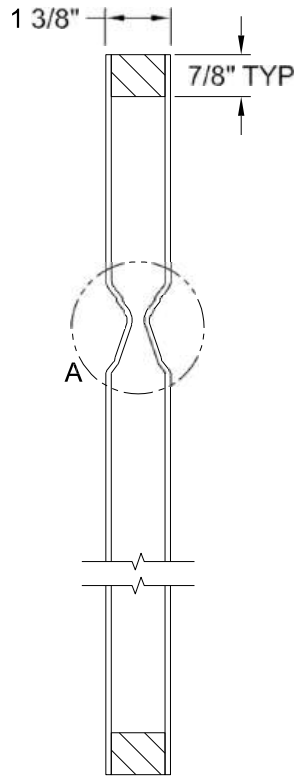

Section A-A

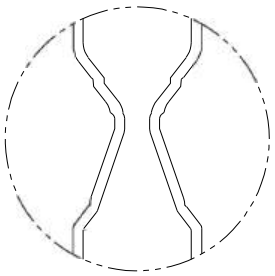

Detail A
INP Profile

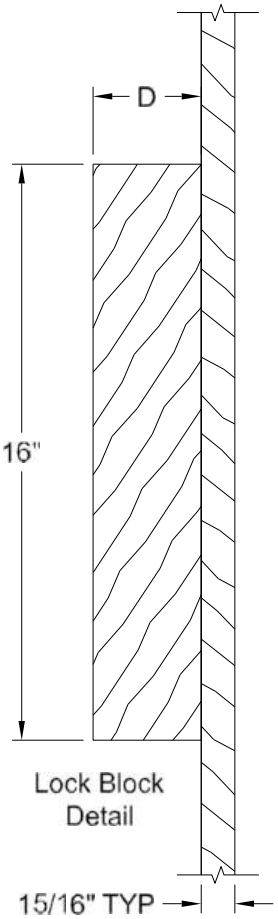

Lock Block
Detail

Dimension Table				
Door Size	A	B	C	D
1'-8" x 8'-0"	20"	12"	4"	3"
1'-6" x 8'-0"	18"	12"	3"	2 1/8"

CAMBRIDGE SMOOTH 6'-8"

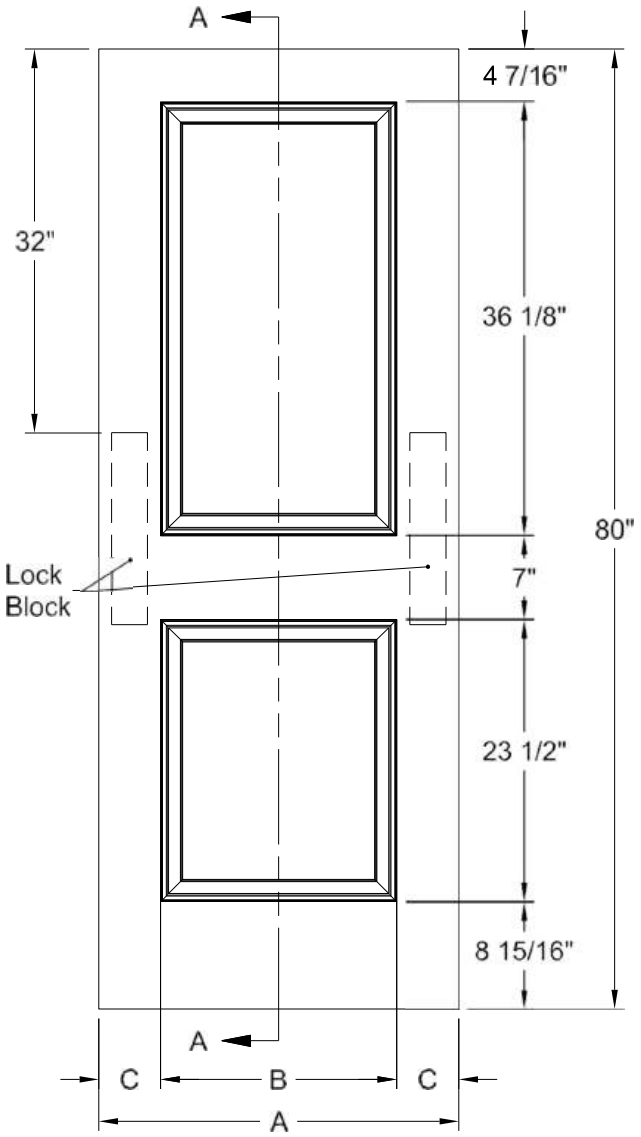

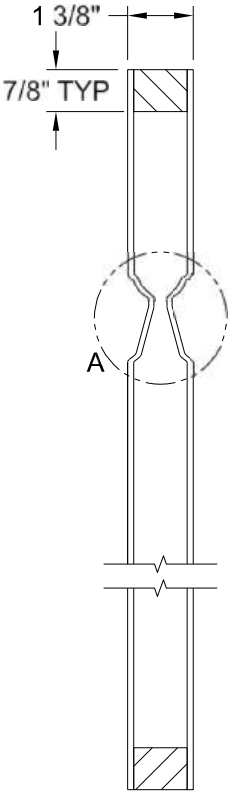

Section A-A

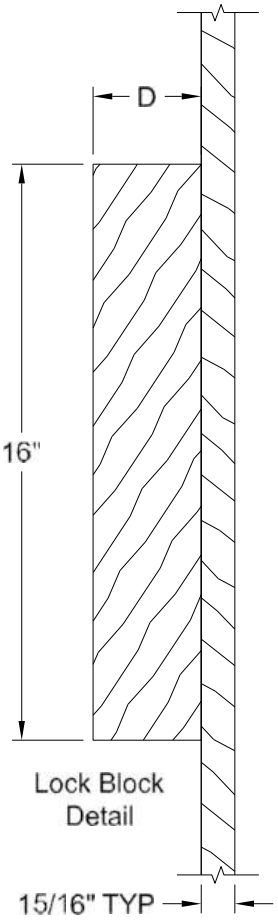

Lock Block
Detail

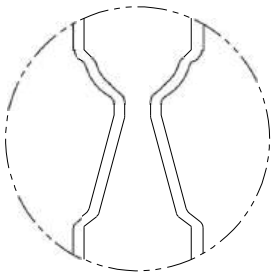

Detail A
Ovolo Sticking

Dimension Table

Door Size	A	B	C	D
3'-0" x 6'-8"	36"	23 11/16"	6 5/32"	3"
2'-10" x 6'-8"	34"	23 11/16"	6 5/32"	3"
2'-8" x 6'-8"	32"	21 11/16"	5 5/32"	3"
2'-6" x 6'-8"	30"	19 11/16"	5 5/32"	3"
2'-4" x 6'-8"	28"	17 11/16"	5 5/32"	3"
2'-2" x 6'-8"	26"	17 11/16"	4 5/32"	3"
2'-0" x 6'-8"	24"	13 11/16"	5 5/32"	3"
1'-10" x 6'-8"	22"	13 11/16"	4 5/32"	3"
1'-8" x 6'-8"	20"	11 9/16"	4 7/32"	3"
1'-6" x 6'-8"	18"	11 9/16"	3 7/32"	2 1/8"
1'-4" x 6'-8"	16"	9 9/16"	3 7/32"	2 1/8"
1'-3" x 6'-8"	15"	8 9/16"	3 7/32"	2 1/8"
1'-2" x 6'-8"	14"	7 9/16"	3 7/32"	2 1/8"
1'-0" x 6'-8"	12"	5 9/16"	3 7/32"	2 1/8"

CAMBRIDGE BIFOLD SMOOTH 6'-8"

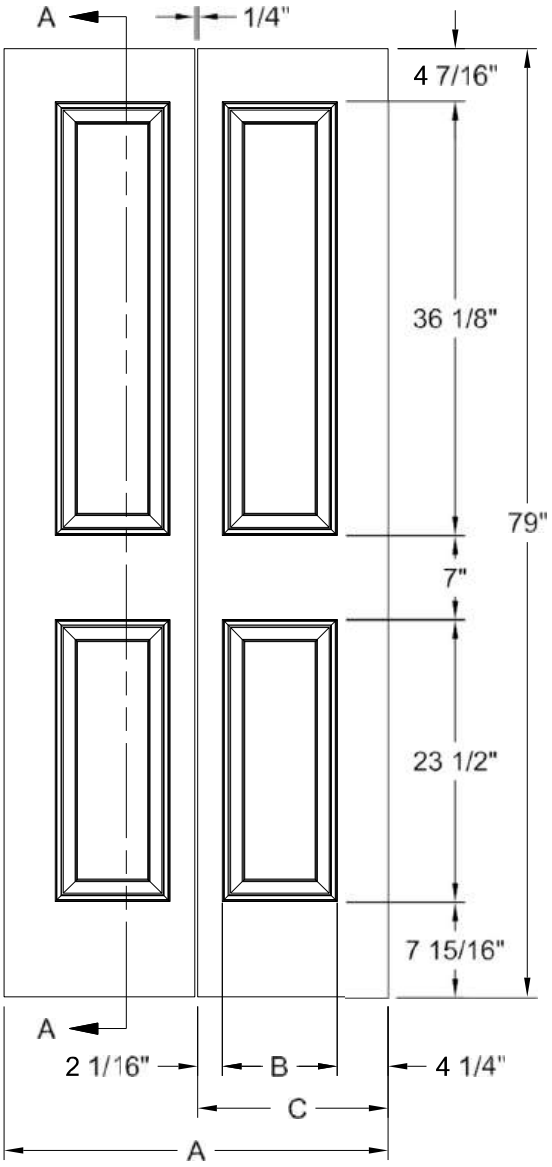

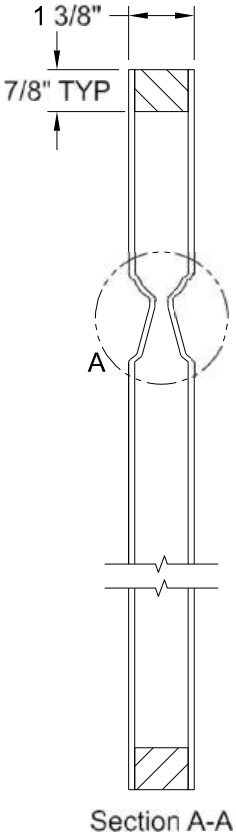

Section A-A

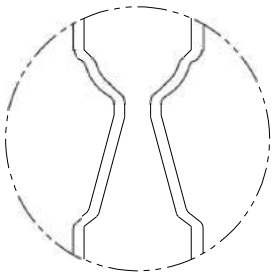

Detail A
Ovolo Sticking

Dimension Table			
Door Size	A	B	C
3'-0" x 6'-8"	36"	11 9/16"	17 7/8"
2'-10" x 6'-8"	34"	10 9/16"	16 7/8"
2'-8" x 6'-8"	32"	9 9/16"	15 7/8"
2'-6" x 6'-8"	30"	8 9/16"	14 7/8"
2'-4" x 6'-8"	28"	7 9/16"	13 7/8"
2'-2" x 6'-8"	26"	6 9/16"	12 7/8"
2'-0" x 6'-8"	24"	5 9/16"	11 7/8"
1'-10" x 6'-8"	22"	4 9/16"	10 7/8"

CAMBRIDGE SMOOTH 7'-0"

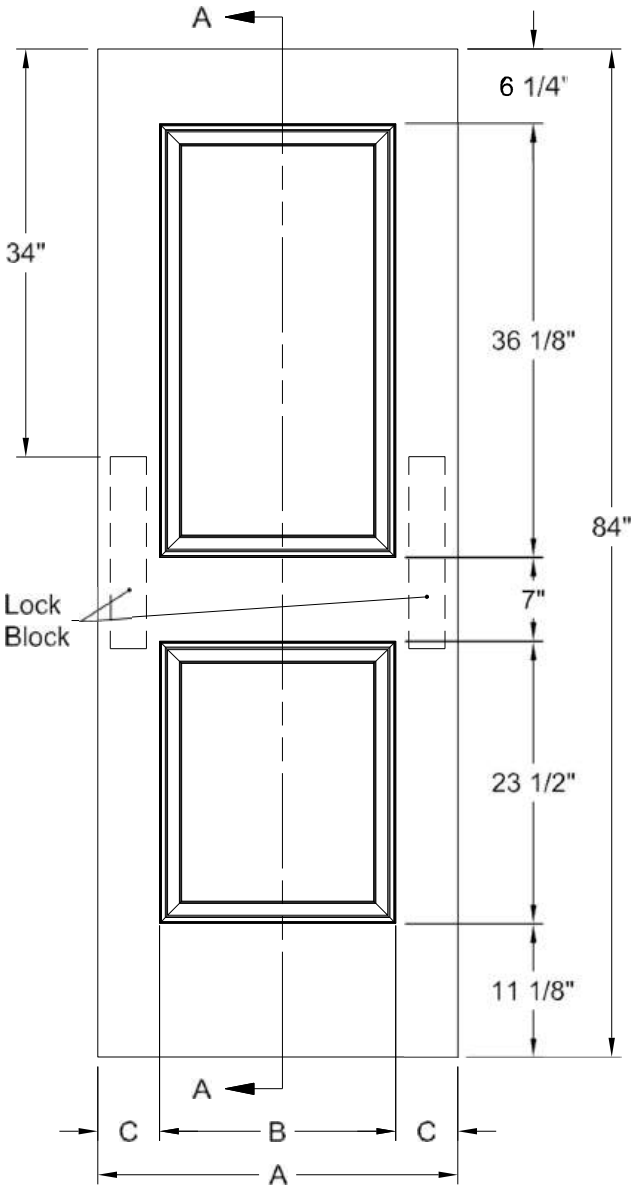

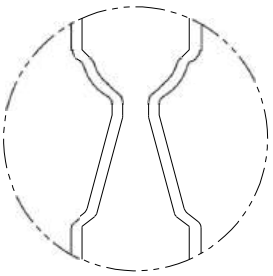

Detail A
Ovolo Sticking

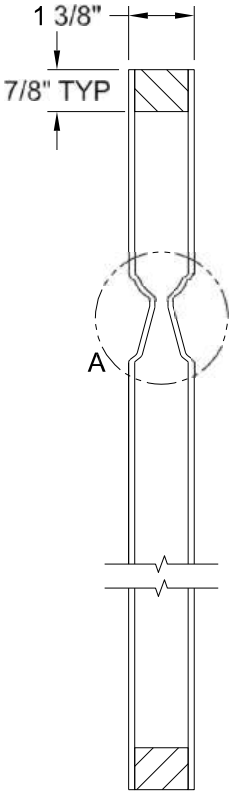

Section A-A

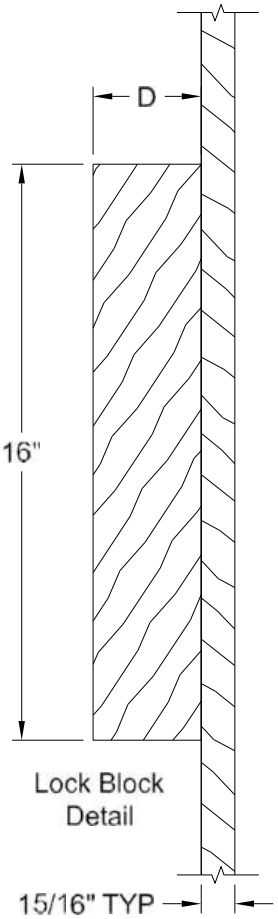

Lock Block
Detail

Dimension Table				
Door Size	A	B	C	D
3'-0" x 7'-0"	36"	23 11/16"	6 5/32"	3"
2'-10" x 7'-0"	34"	23 11/16"	5 5/32"	3"
2'-8" x 7'-0"	32"	21 11/16"	5 5/32"	3"
2'-6" x 7'-0"	30"	19 11/16"	5 5/32"	3"
2'-4" x 7'-0"	28"	17 11/16"	5 5/32"	3"
2'-2" x 7'-0"	26"	17 11/16"	4 5/32"	3"
2'-0" x 7'-0"	24"	13 11/16"	5 5/32"	3"
1'-10" x 7'-0"	22"	13 11/16"	4 5/32"	3"
1'-8" x 7'-0"	20"	11 9/16"	4 7/32"	3"
1'-6" x 7'-0"	18"	11 9/16"	3 7/32"	2 1/8"
1'-4" x 7'-0"	16"	9 9/16"	3 7/32"	2 1/8"
1'-3" x 7'-0"	15"	8 9/16"	3 7/32"	2 1/8"
1'-2" x 7'-0"	14"	7 9/16"	3 7/32"	2 1/8"
1'-0" x 7'-0"	12"	5 9/16"	3 7/32"	2 1/8"

CAMBRIDGE BIFOLD SMOOTH 7'-0"

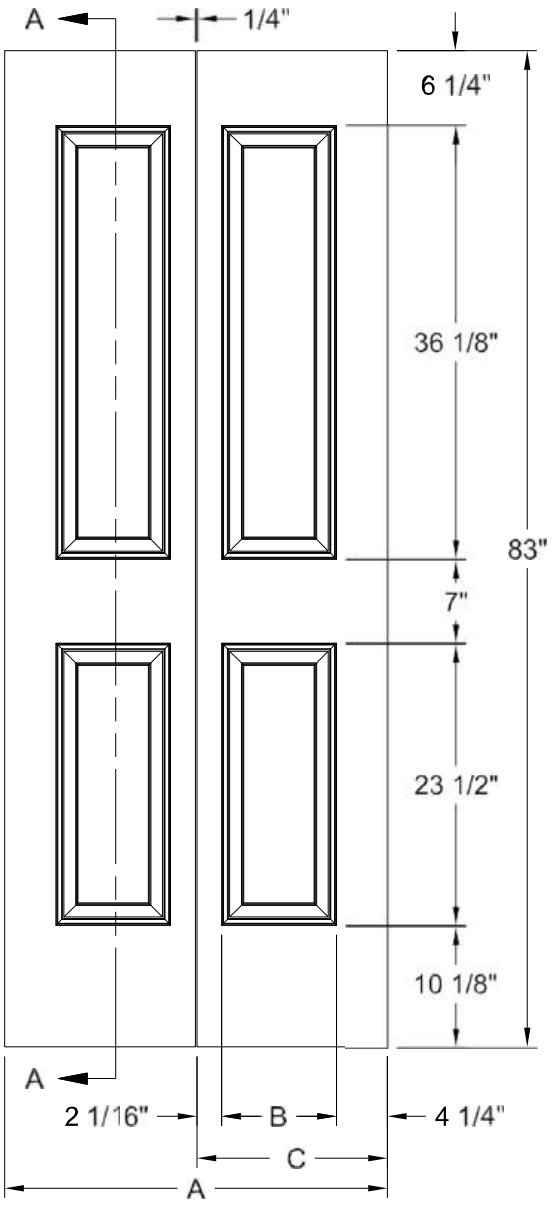

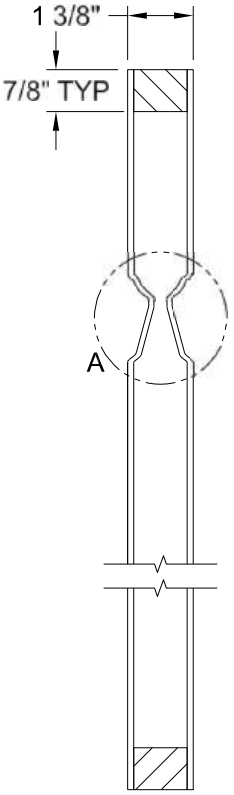

Section A-A

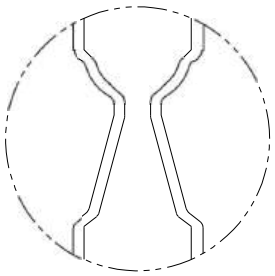

Detail A
Ovolo Sticking

Dimension Table			
Door Size	A	B	C
3'-0" x 7'-0"	36"	11 9/16"	17 7/8"
2'-10" x 7'-0"	34"	10 9/16"	16 7/8"
2'-8" x 7'-0"	32"	9 9/16"	15 7/8"
2'-6" x 7'-0"	30"	8 9/16"	14 7/8"
2'-4" x 7'-0"	28"	7 9/16"	13 7/8"
2'-2" x 7'-0"	26"	6 9/16"	12 7/8"
2'-0" x 7'-0"	24"	5 9/16"	11 7/8"
1'-10" x 7'-0"	22"	4 9/16"	10 7/8"

CAMBRIDGE SMOOTH 8'-0"

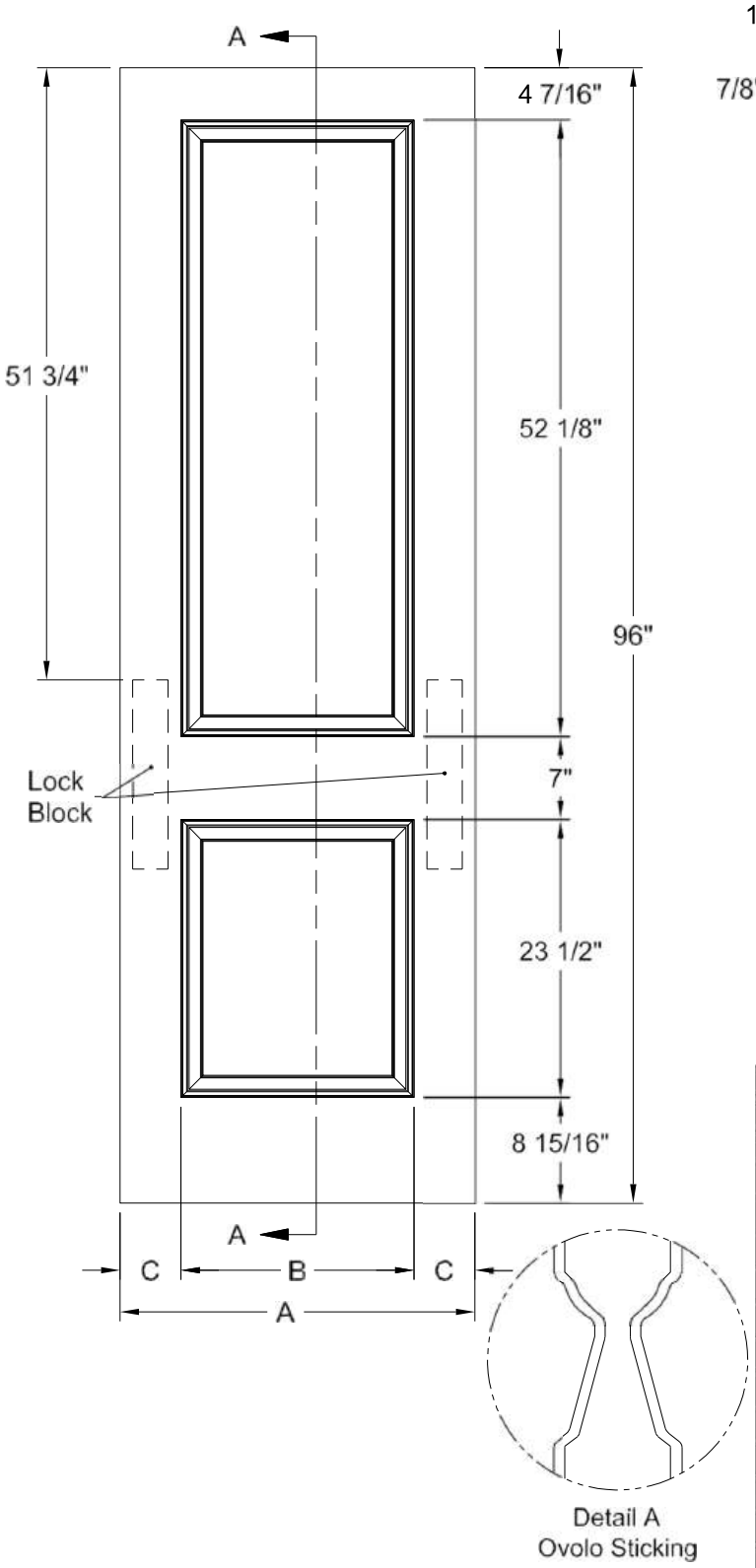

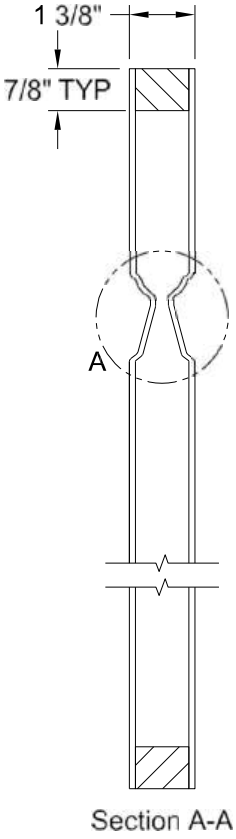

Section A-A

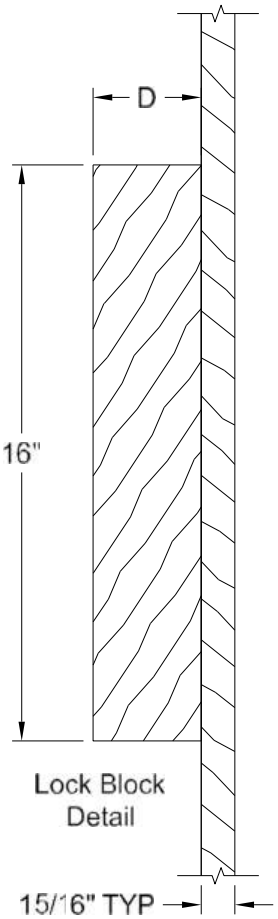

Lock Block
Detail

15/16" TYP

Detail A
Ovolo Sticking

Dimension Table				
Door Size	A	B	C	D
3'-0" x 8'-0"	36"	23 11/16"	6 5/32"	3"
2'-10" x 8'-0"	34"	23 11/16"	5 5/32"	3"
2'-8" x 8'-0"	32"	21 11/16"	5 5/32"	3"
2'-6" x 8'-0"	30"	19 11/16"	5 5/32"	3"
2'-4" x 8'-0"	28"	17 11/16"	5 5/32"	3"
2'-2" x 8'-0"	26"	17 11/16"	4 5/32"	3"
2'-0" x 8'-0"	24"	13 11/16"	5 5/32"	3"
1'-10" x 8'-0"	22"	13 11/16"	4 5/32"	3"
1'-8" x 8'-0"	20"	9 3/4"	5 1/8"	3"
1'-6" x 8'-0"	18"	9 3/4"	4 1/8"	3"
1'-4" x 8'-0"	16"	7"	4 1/2"	3"
1'-3" x 8'-0"	15"	7"	4"	3"
1'-2" x 8'-0"	14"	7"	3 1/2"	2 1/8"
1'-0" x 8'-0"	12"	7"	2 1/2"	1 3/8"

CAMBRIDGE BIFOLD SMOOTH 8'-0"

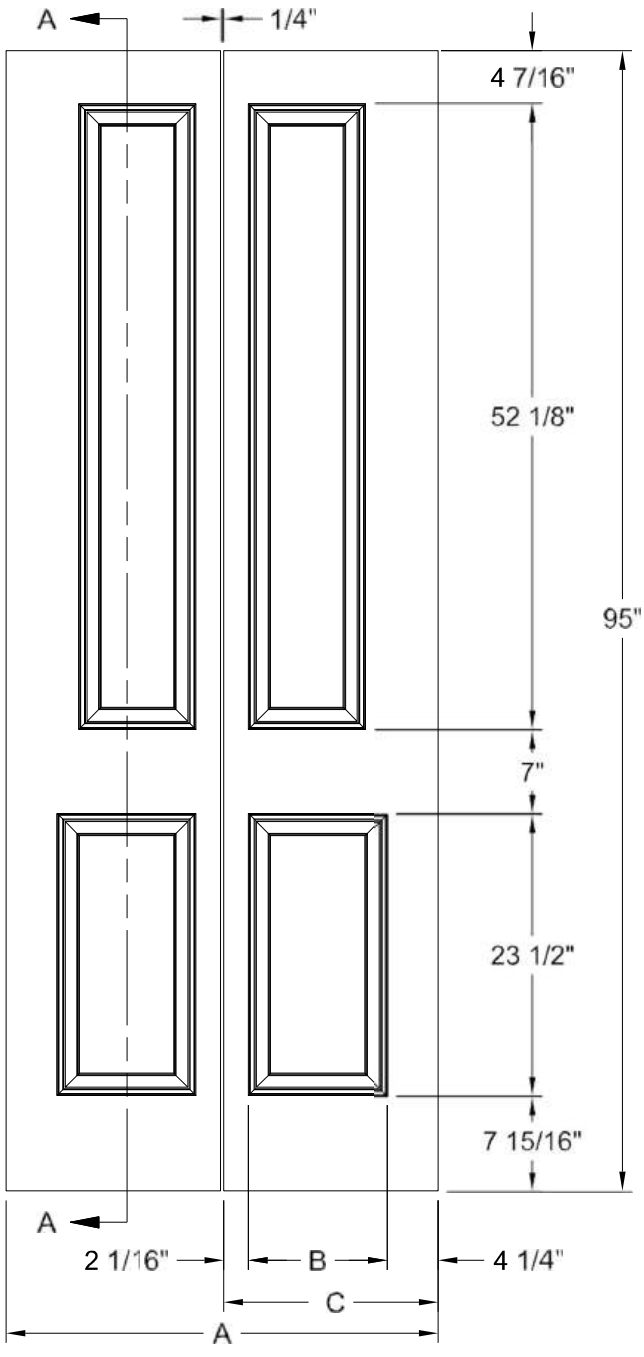

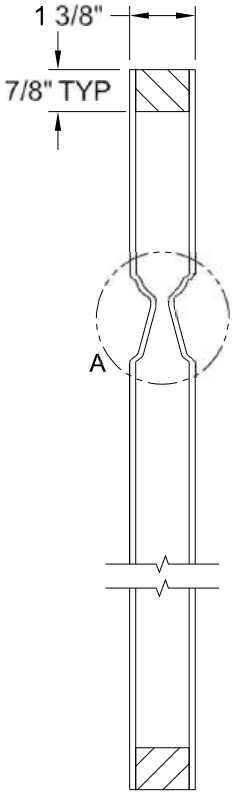

Section A-A

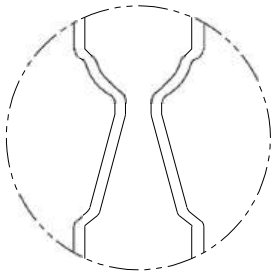

Detail A
Ovolo Sticking

Dimension Table			
Door Size	A	B	C
3'-0" x 8'-0"	36"	11 9/16"	17 7/8"
2'-10" x 8'-0"	34"	10 9/16"	16 7/8"
2'-8" x 8'-0"	32"	9 9/16"	15 7/8"
2'-6" x 8'-0"	30"	8 9/16"	14 7/8"
2'-4" x 8'-0"	28"	7 9/16"	13 7/8"
2'-2" x 8'-0"	26"	6 9/16"	12 7/8"
2'-0" x 8'-0"	24"	5 9/16"	11 7/8"
1'-10" x 8'-0"	22"	4 9/16"	10 7/8"

CAMBRIDGE COMMERCIAL SMOOTH 6'-8"

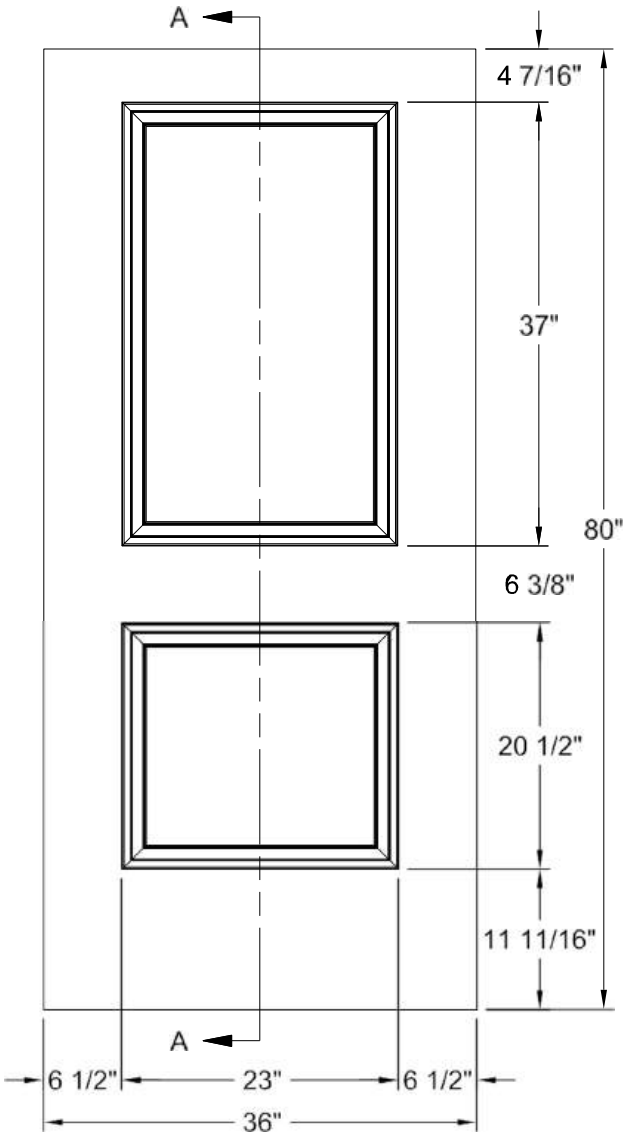

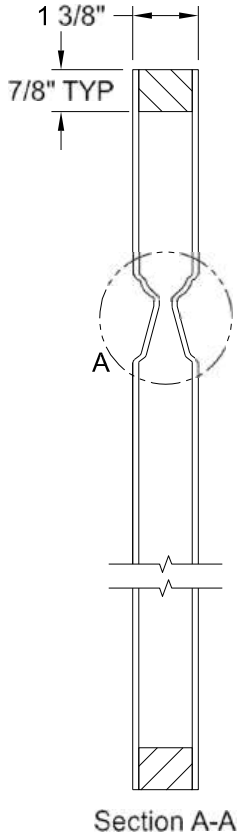

Section A-A

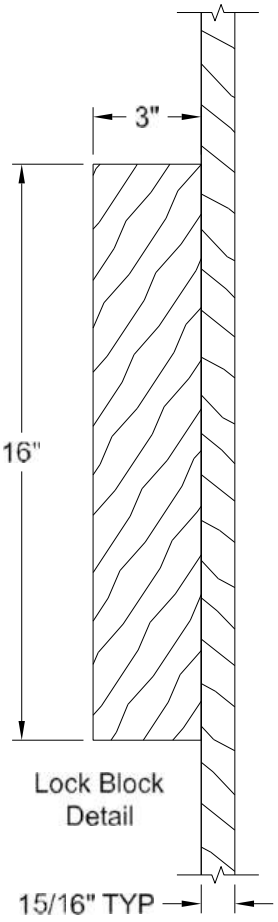

Lock Block
Detail

15/16" TYP

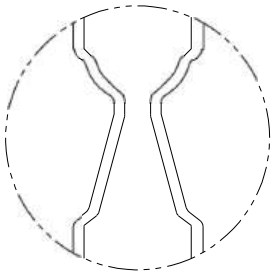

Detail A
Ovolo Sticking

Dimension Table
Door Size
3'-0" x 6'-8"

CAMBRIDGE COMMERCIAL SMOOTH 7'-0"

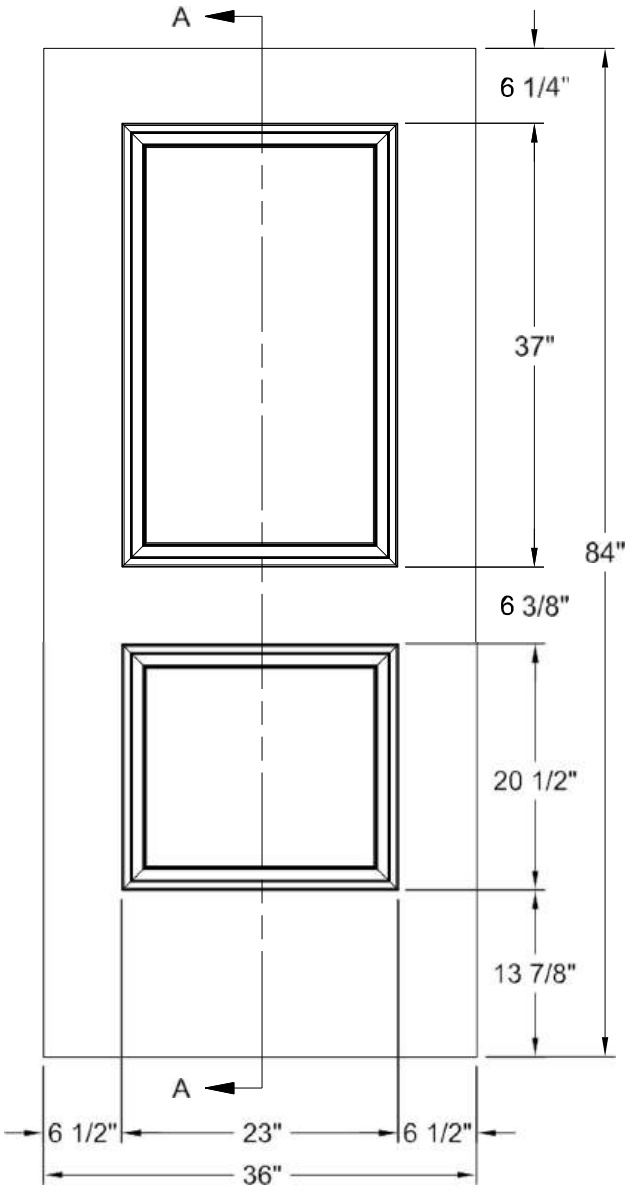

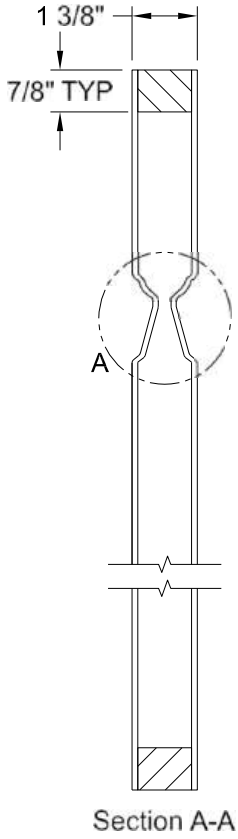

Section A-A

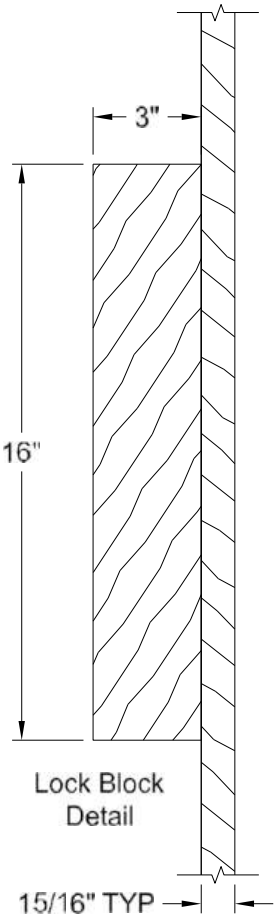

Lock Block
Detail

15/16" TYP

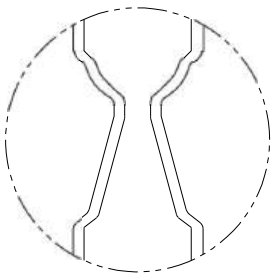

Detail A
Ovolo Sticking

Dimension Table
Door Size
3'-0" x 7'-0"

CAMDEN OAK GRAIN 6'-8"

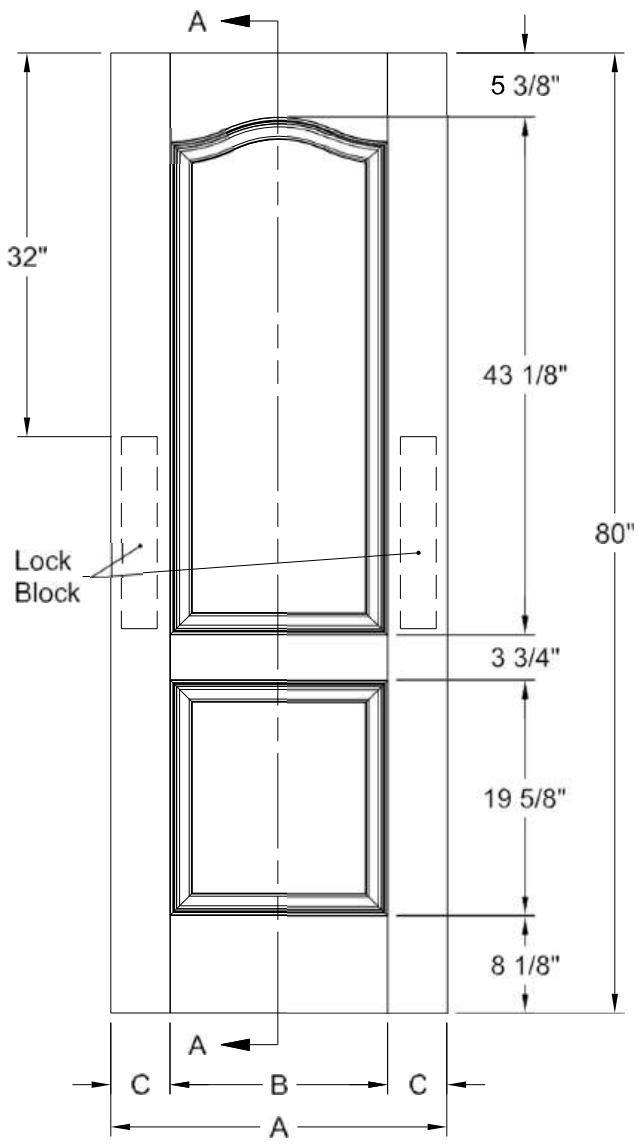

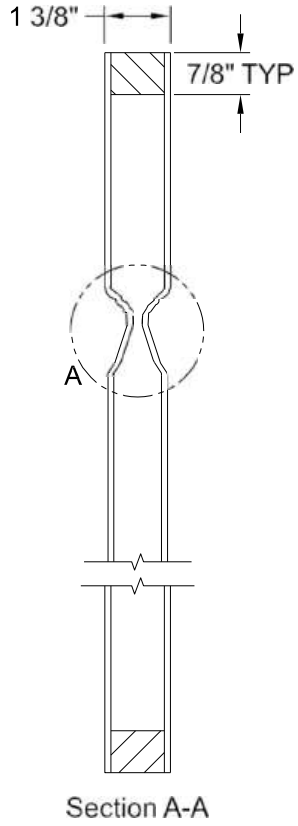

Section A-A

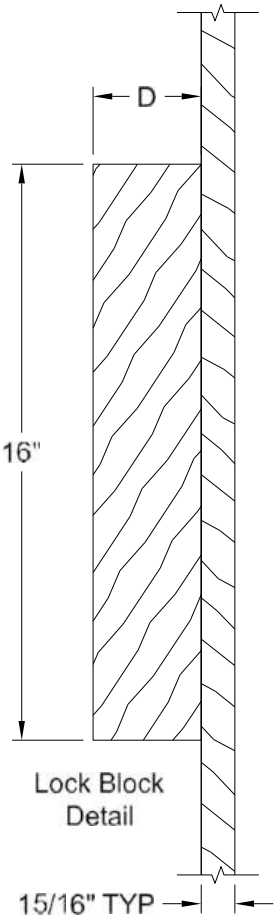

Lock Block
Detail

15/16" TYP

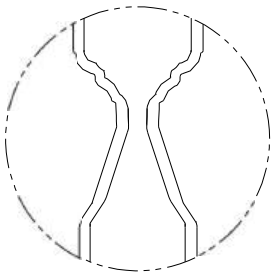

Detail A
Modified Cove &
Bead Sticking

Dimension Table				
Door Size	A	B	C	D
3'-0" x 6'-8"	36"	25"	5 1/2"	3"
2'-10" x 6'-8"	34"	22 13/16"	5 19/32"	3"
2'-8" x 6'-8"	32"	22 13/16"	4 19/32"	3"
2'-6" x 6'-8"	30"	19 11/16"	5 5/32"	3"
2'-4" x 6'-8"	28"	18 1/8"	4 15/16"	3"
2'-2" x 6'-8"	26"	14 15/16"	5 17/32"	3"
2'-0" x 6'-8"	24"	14 15/16"	4 17/32"	3"
1'-10" x 6'-8"	22"	14 15/16"	3 17/32"	2 1/8"
1'-8" x 6'-8"	20"	9 1/2"	5 1/4"	3"
1'-6" x 6'-8"	18"	9 1/2"	4 1/4"	3"
1'-4" x 6'-8"	16"	7 1/2"	4 1/4"	3"
1'-3" x 6'-8"	15"	7 1/2"	3 3/4"	2 11/16"
1'-2" x 6'-8"	14"	7 1/2"	3 1/4"	2 1/8"
1'-0" x 6'-8"	12"	6 11/16"	2 21/32"	1 5/8"

CAMDEN BIFOLD OAK GRAIN 6'-8"

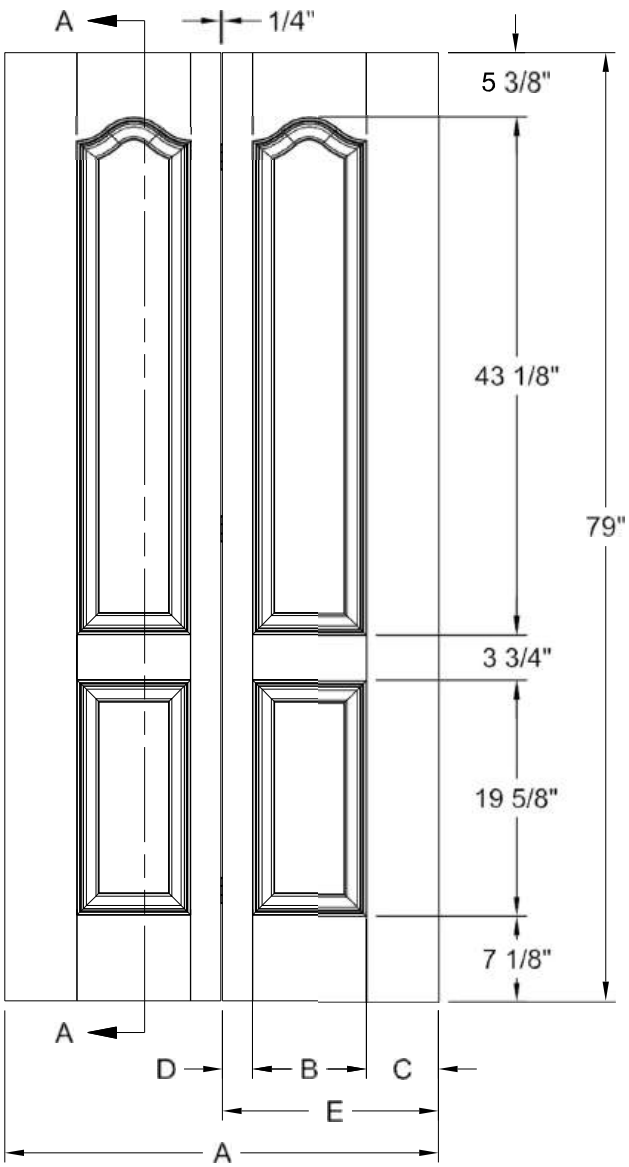

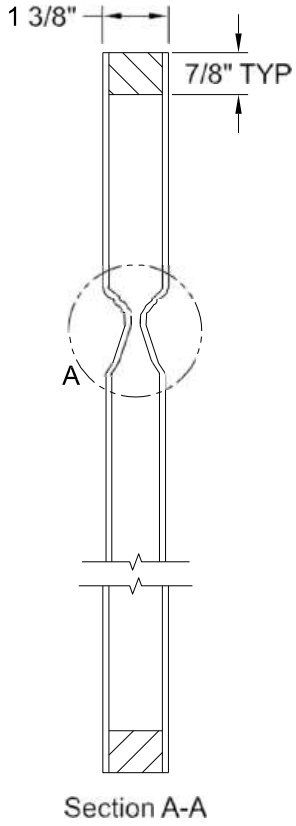

Section A-A

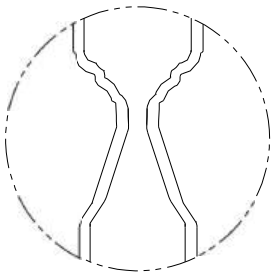

Detail A
Modified Cove &
Bead Sticking

Dimension Table					
Door Size	A	B	C	D	E
3'-0" x 6'-8"	36"	9 1/2"	6"	2 1/4"	17 7/8"
2'-10" x 6'-8"	34"	9 1/2"	5"	2 1/4"	16 7/8"
2'-8" x 6'-8"	32"	9 1/2"	4 9/16"	1 13/16"	15 7/8"
2'-6" x 6'-8"	30"	7 1/2"	5 1/8"	2 1/4"	14 7/8"
2'-4" x 6'-8"	28"	7 1/2"	4 1/8"	2 1/4"	13 7/8"
2'-2" x 6'-8"	26"	7 1/2"	3 1/8"	2 1/4"	12 7/8"
2'-0" x 6'-8"	24"	6 11/16"	3 13/32"	1 29/32"	11 7/8"
1'-10" x 6'-8"	22"	6 11/16"	2 13/32"	1 29/32"	10 7/8"

CAMDEN OAK GRAIN 7'-0"

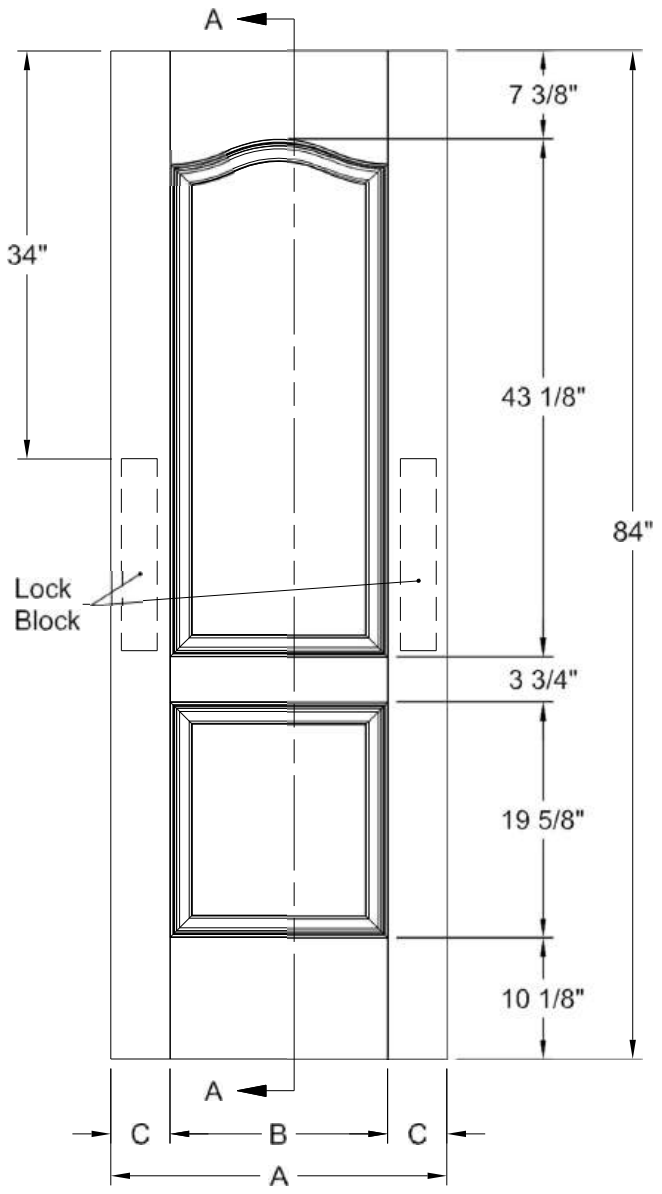

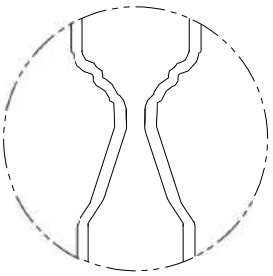

Detail A
Modified Cove &
Bead Sticking

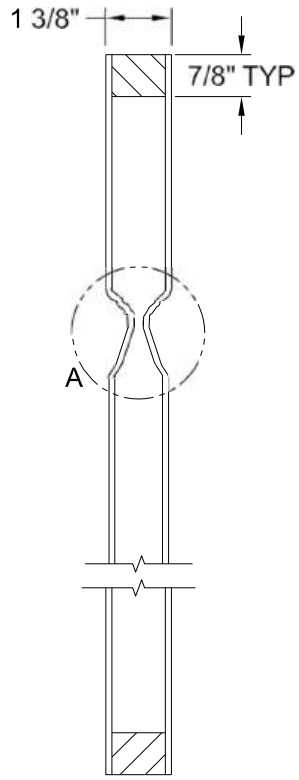

Section A-A

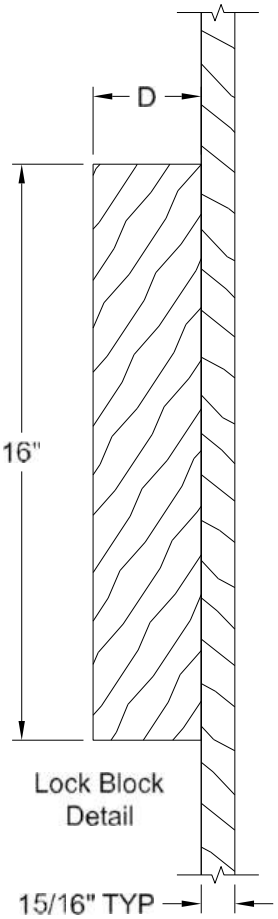

Lock Block
Detail

Dimension Table				
Door Size	A	B	C	D
3'-0" x 7'-0"	36"	25"	5 1/2"	3"
2'-10" x 7'-0"	34"	22 13/16"	5 19/32"	3"
2'-8" x 7'-0"	32"	22 13/16"	4 19/32"	3"
2'-6" x 7'-0"	30"	19 11/16"	5 5/32"	3"
2'-4" x 7'-0"	28"	18 1/8"	4 15/16"	3"
2'-2" x 7'-0"	26"	14 15/16"	5 17/32"	3"
2'-0" x 7'-0"	24"	14 15/16"	4 17/32"	3"
1'-10" x 7'-0"	22"	14 15/16"	3 17/32"	2 1/8"
1'-8" x 7'-0"	20"	9 1/2"	5 1/4"	3"
1'-6" x 7'-0"	18"	9 1/2"	4 1/4"	3"
1'-4" x 7'-0"	16"	7 1/2"	4 1/4"	3"
1'-3" x 7'-0"	15"	7 1/2"	3 3/4"	2 11/16"
1'-2" x 7'-0"	14"	7 1/2"	3 1/4"	2 1/8"
1'-0" x 7'-0"	12"	6 11/16"	2 21/32"	1 5/8"

CAMDEN BIFOLD OAK GRAIN 7'-0"

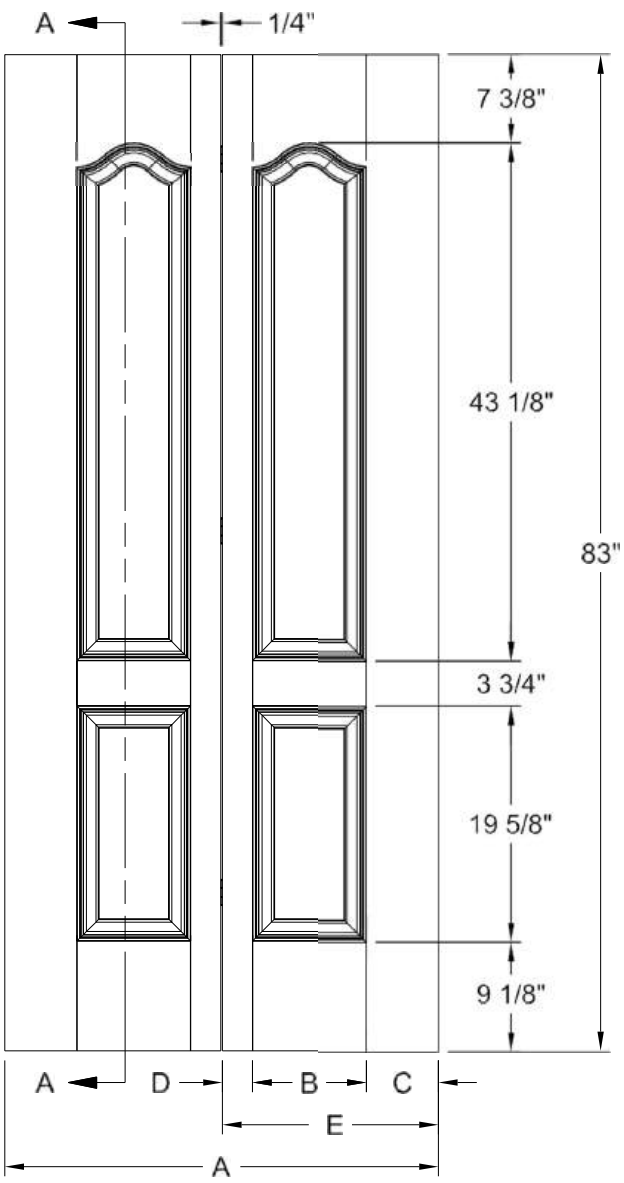

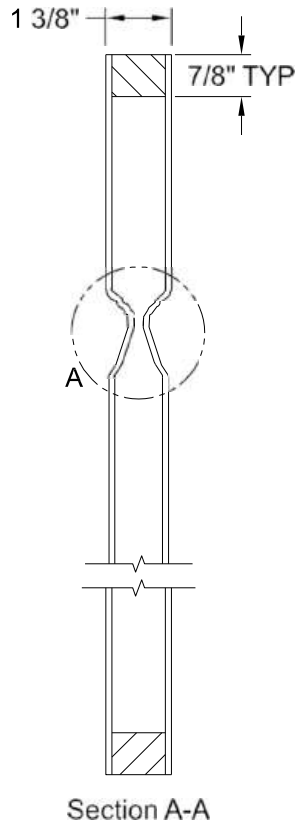

Section A-A

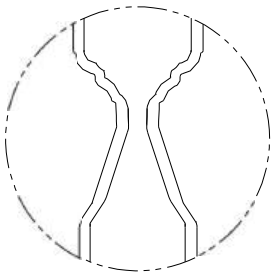

Detail A
Modified Cove &
Bead Sticking

Dimension Table					
Door Size	A	B	C	D	E
3'-0" x 7'-0"	36"	9 1/2"	6"	2 1/4"	17 7/8"
2'-10" x 7'-0"	34"	9 1/2"	5"	2 1/4"	16 7/8"
2'-8" x 7'-0"	32"	9 1/2"	4 9/16"	1 13/16"	15 7/8"
2'-6" x 7'-0"	30"	7 1/2"	5 1/8"	2 1/4"	14 7/8"
2'-4" x 7'-0"	28"	7 1/2"	4 1/8"	2 1/4"	13 7/8"
2'-2" x 7'-0"	26"	7 1/2"	3 1/8"	2 1/4"	12 7/8"
2'-0" x 7'-0"	24"	6 11/16"	3 13/32"	1 29/32"	11 7/8"
1'-10" x 7'-0"	22"	6 11/16"	2 13/32"	1 29/32"	10 7/8"

CARRARA SMOOTH 6'-8"

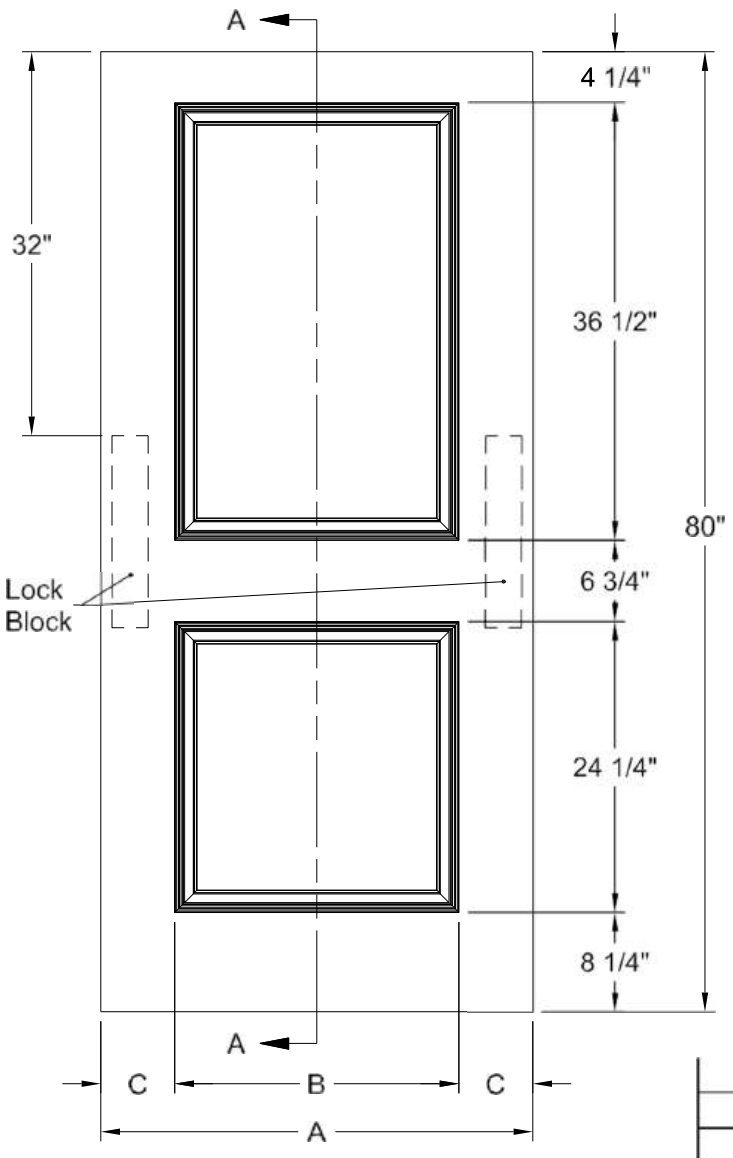

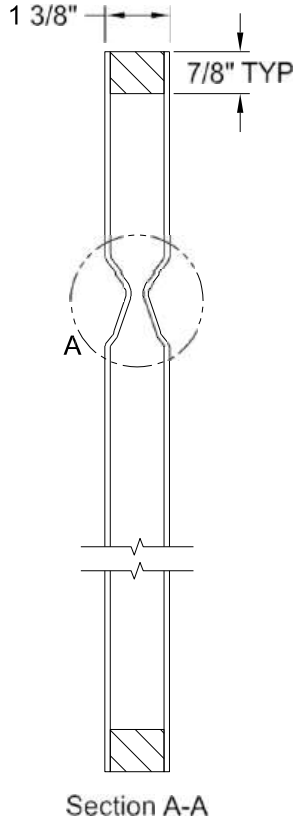

Section A-A

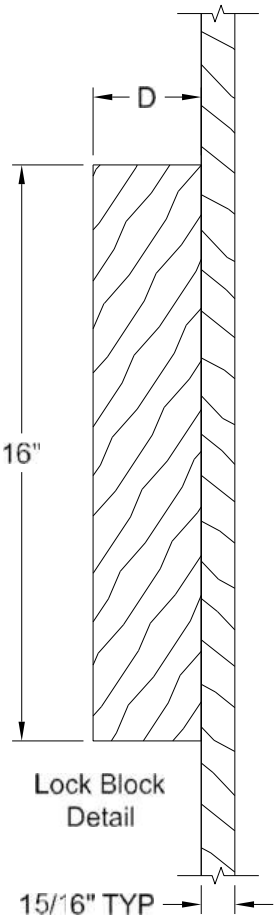

Lock Block
Detail

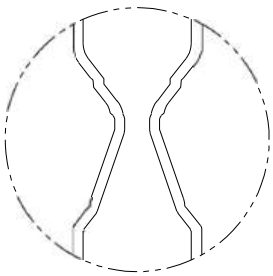

Detail A
INP Profile

Dimension Table				
Door Size	A	B	C	D
3'-0" x 6'-8"	36"	23 5/8"	6 3/16"	3"
2'-10" x 6'-8"	34"	21 5/8"	6 3/16"	3"
2'-8" x 6'-8"	32"	21 5/8"	5 3/16"	3"
2'-6" x 6'-8"	30"	19 5/8"	5 3/16"	3"
2'-4" x 6'-8"	28"	17 5/8"	5 3/16"	3"
2'-2" x 6'-8"	26"	15 5/8"	5 3/16"	3"
2'-0" x 6'-8"	24"	15 5/8"	4 3/16"	3"
1'-10" x 6'-8"	22"	15 5/8"	3 3/16"	2 1/8"
1'-8" x 6'-8"	20"	12"	4"	3"
1'-6" x 6'-8"	18"	12"	3"	1 5/8"
1'-4" x 6'-8"	16"	7"	4 1/2"	3"
1'-3" x 6'-8"	15"	7"	4"	3"
1'-2" x 6'-8"	14"	7"	3 1/2"	2 1/8"
1'-0" x 6'-8"	12"	7"	2 1/2"	1 3/8"

CARRARA BIFOLD SMOOTH 6'-8"

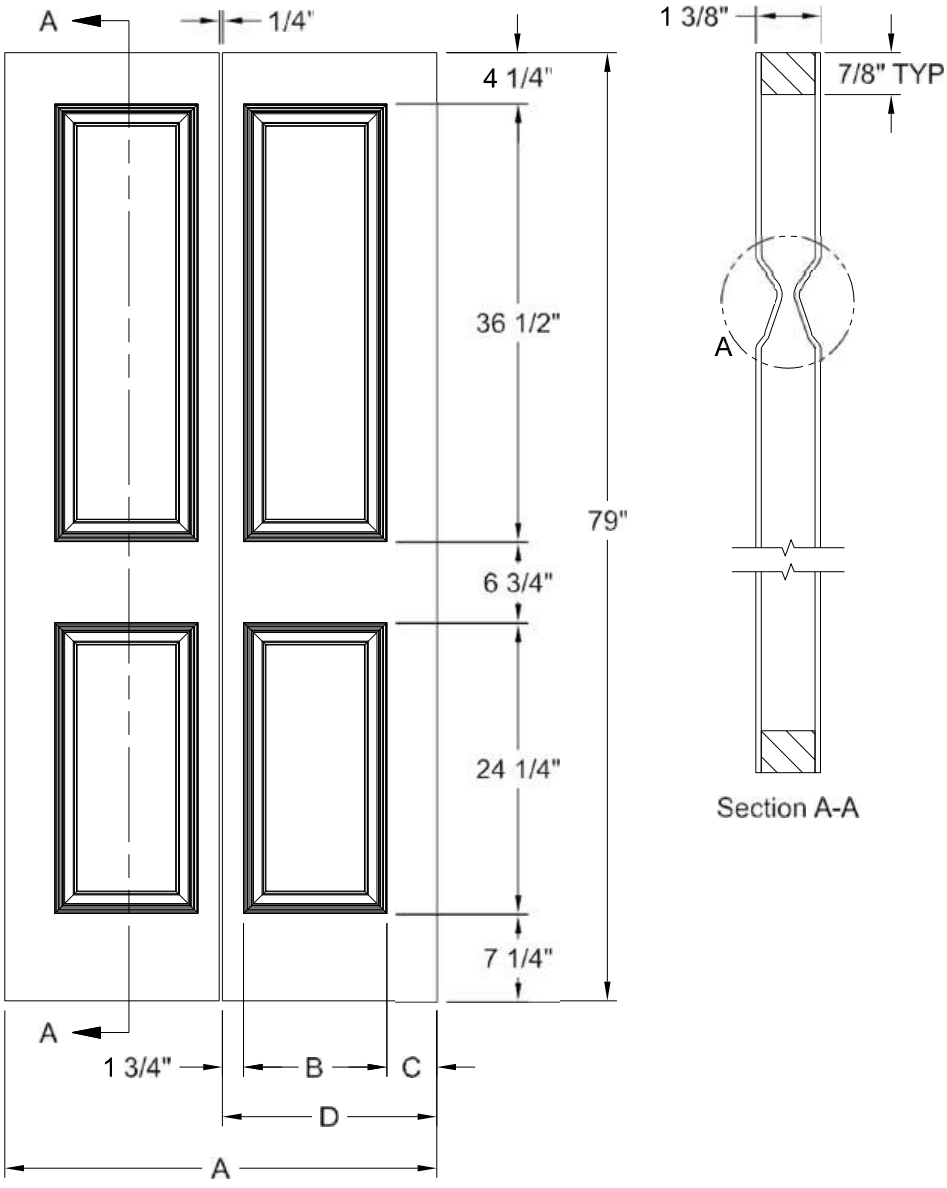

Section A-A

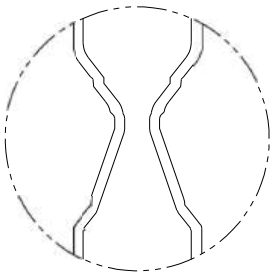

Detail A
INP Profile

Dimension Table				
Door Size	A	B	C	D
3'-0" x 6'-8"	36"	12"	4 1/8"	17 7/8"
2'-10" x 6'-8"	34"	10"	5 1/8"	16 7/8"
2'-8" x 6'-8"	32"	10"	4 1/8"	15 7/8"
2'-6" x 6'-8"	30"	9"	4 1/8"	14 7/8"
2'-4" x 6'-8"	28"	8"	4 1/8"	13 7/8"
2'-2" x 6'-8"	26"	6"	5 1/8"	12 7/8"
2'-0" x 6'-8"	24"	6"	4 1/8"	11 7/8"
1'-10" x 6'-8"	22"	6"	3 1/8"	10 7/8"

CARRARA SMOOTH 7'-0"

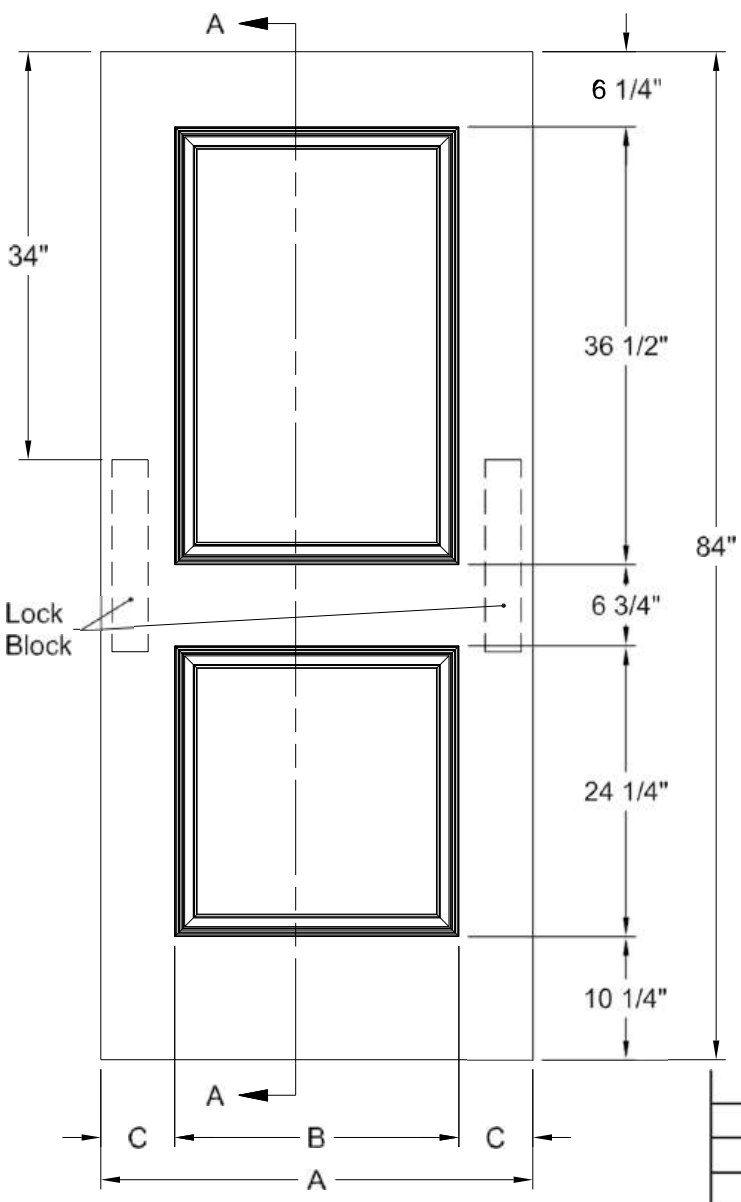

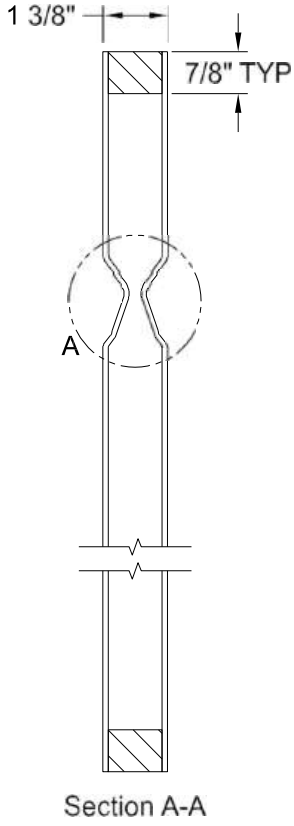

Section A-A

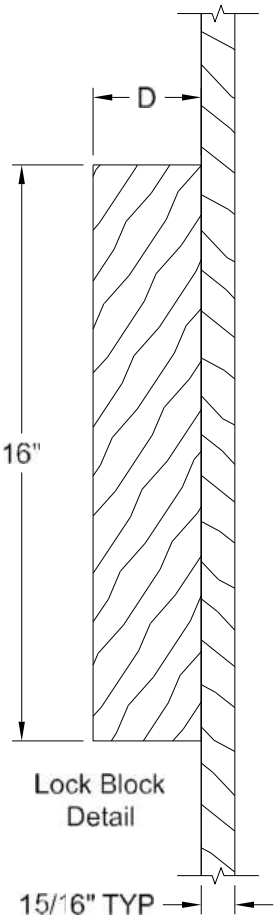

Lock Block
Detail

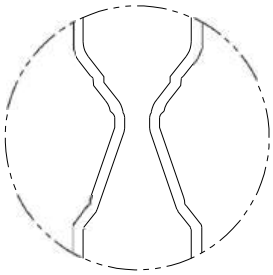

Detail A
INP Profile

Dimension Table

Door Size	A	B	C	D
3'-0" x 7'-0"	36"	23 5/8"	6 3/16"	3"
2'-10" x 7'-0"	34"	21 5/8"	6 3/16"	3"
2'-8" x 7'-0"	32"	21 5/8"	5 3/16"	3"
2'-6" x 7'-0"	30"	19 5/8"	5 3/16"	3"
2'-4" x 7'-0"	28"	17 5/8"	5 3/16"	3"
2'-2" x 7'-0"	26"	15 5/8"	5 3/16"	3"
2'-0" x 7'-0"	24"	15 5/8"	4 3/16"	3"
1'-10" x 7'-0"	22"	15 5/8"	3 3/16"	2 1/8"
1'-8" x 7'-0"	20"	12"	4"	3"
1'-6" x 7'-0"	18"	12"	3"	1 5/8"
1'-4" x 7'-0"	16"	7"	4 1/2"	3"
1'-3" x 7'-0"	15"	7"	4"	3"
1'-2" x 7'-0"	14"	7"	3 1/2"	2 1/8"
1'-0" x 7'-0"	12"	7"	2 1/2"	1 3/8"

CARRARA BIFOLD SMOOTH 7'-0"

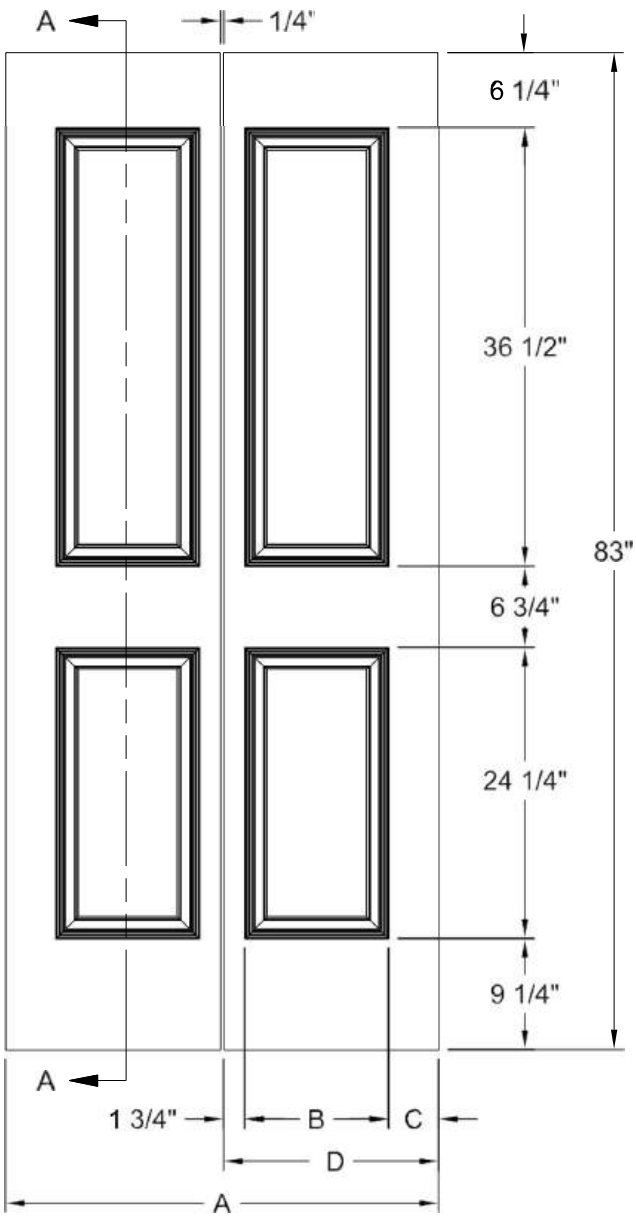

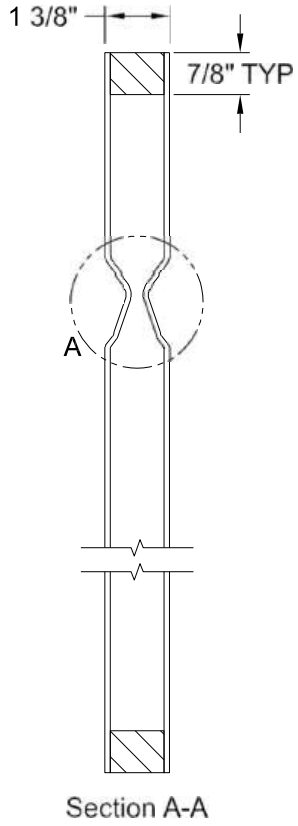

Section A-A

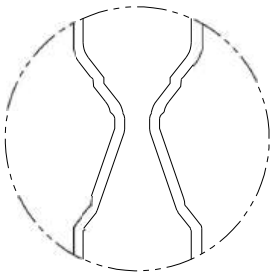

Detail A
INP Profile

Dimension Table				
Door Size	A	B	C	D
3'-0" x 7'-0"	36"	12"	4 1/8"	17 7/8"
2'-10" x 7'-0"	34"	10"	5 1/8"	16 7/8"
2'-8" x 7'-0"	32"	10"	4 1/8"	15 7/8"
2'-6" x 7'-0"	30"	9"	4 1/8"	14 7/8"
2'-4" x 7'-0"	28"	8"	4 1/8"	13 7/8"
2'-2" x 7'-0"	26"	6"	5 1/8"	12 7/8"
2'-0" x 7'-0"	24"	6"	4 1/8"	11 7/8"
1'-10" x 7'-0"	22"	6"	3 1/8"	10 7/8"

CARRARA SMOOTH 8'-0"

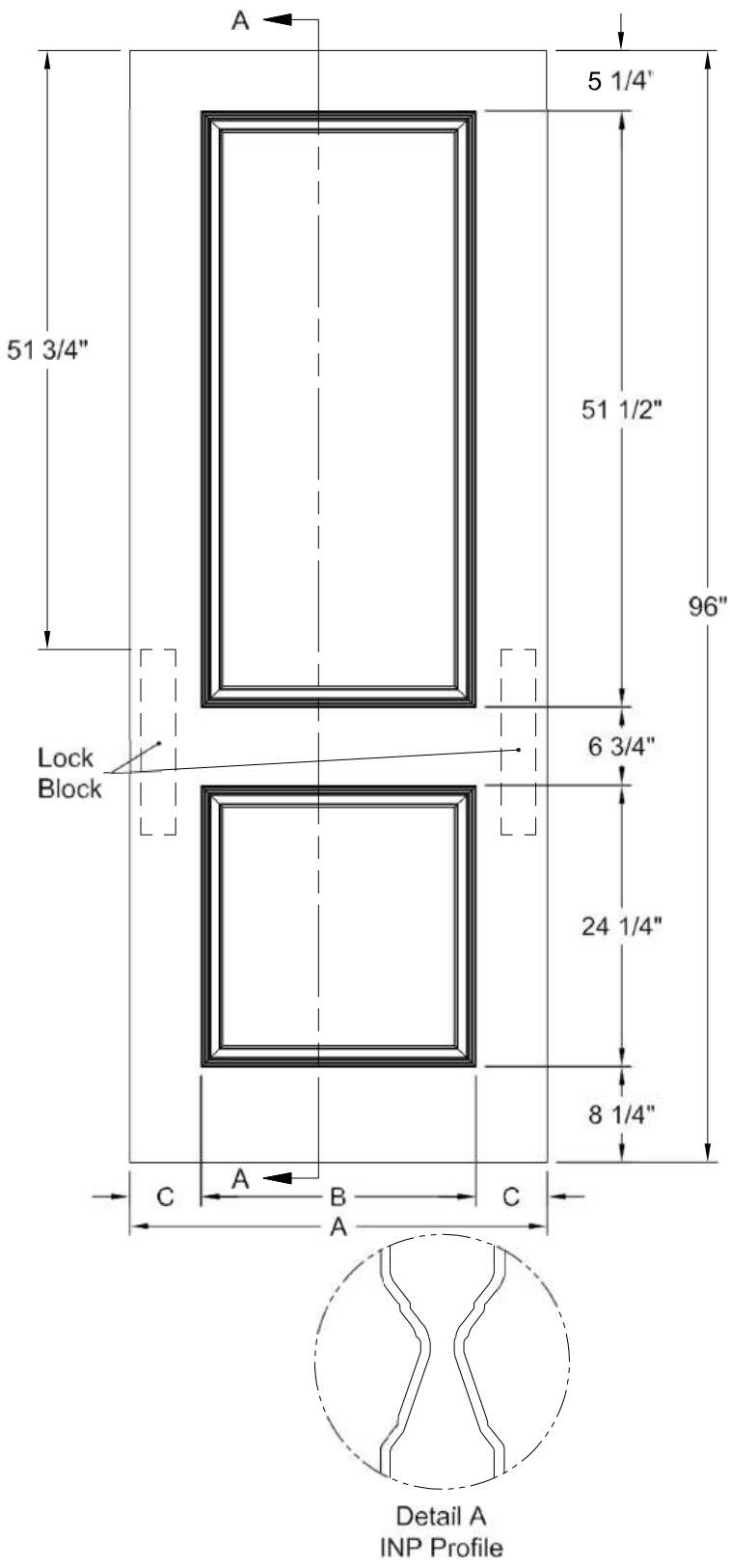

Detail A
INP Profile

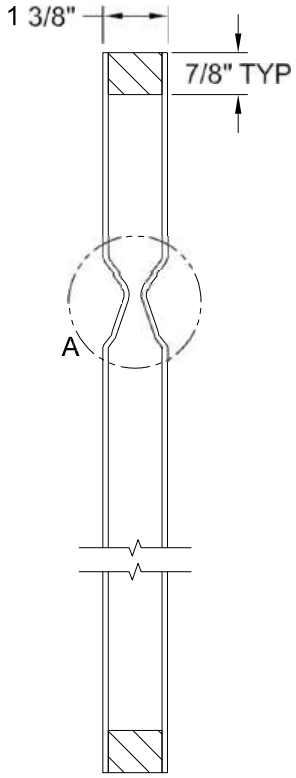

Section A-A

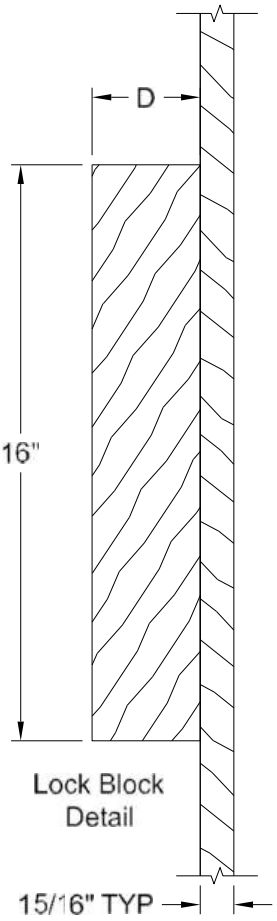

Lock Block
Detail

Dimension Table				
Door Size	A	B	C	D
3'-0" x 8'-0"	36"	23 5/8"	6 3/16"	3"
2'-10" x 8'-0"	34"	21 5/8"	6 3/16"	3"
2'-8" x 8'-0"	32"	21 5/8"	5 3/16"	3"
2'-6" x 8'-0"	30"	19 5/8"	5 3/16"	3"
2'-4" x 8'-0"	28"	17 5/8"	5 3/16"	3"
2'-2" x 8'-0"	26"	15 5/8"	5 3/16"	3"
2'-0" x 8'-0"	24"	15 5/8"	4 3/16"	3"
1'-10" x 8'-0"	22"	15 5/8"	3 3/16"	2 1/8"
1'-8" x 8'-0"	20"	12"	4"	3"
1'-6" x 8'-0"	18"	12"	3"	1 5/8"
1'-4" x 8'-0"	16"	7"	4 1/2"	3"
1'-3" x 8'-0"	15"	7"	4"	3"
1'-2" x 8'-0"	14"	7"	3 1/2"	2 1/8"
1'-0" x 8'-0"	12"	7"	2 1/2"	1 3/8"

Product specifications may change without notice.
Questions? Consult JELD-WEN customer service.

CARRARA BIFOLD SMOOTH 8'-0"

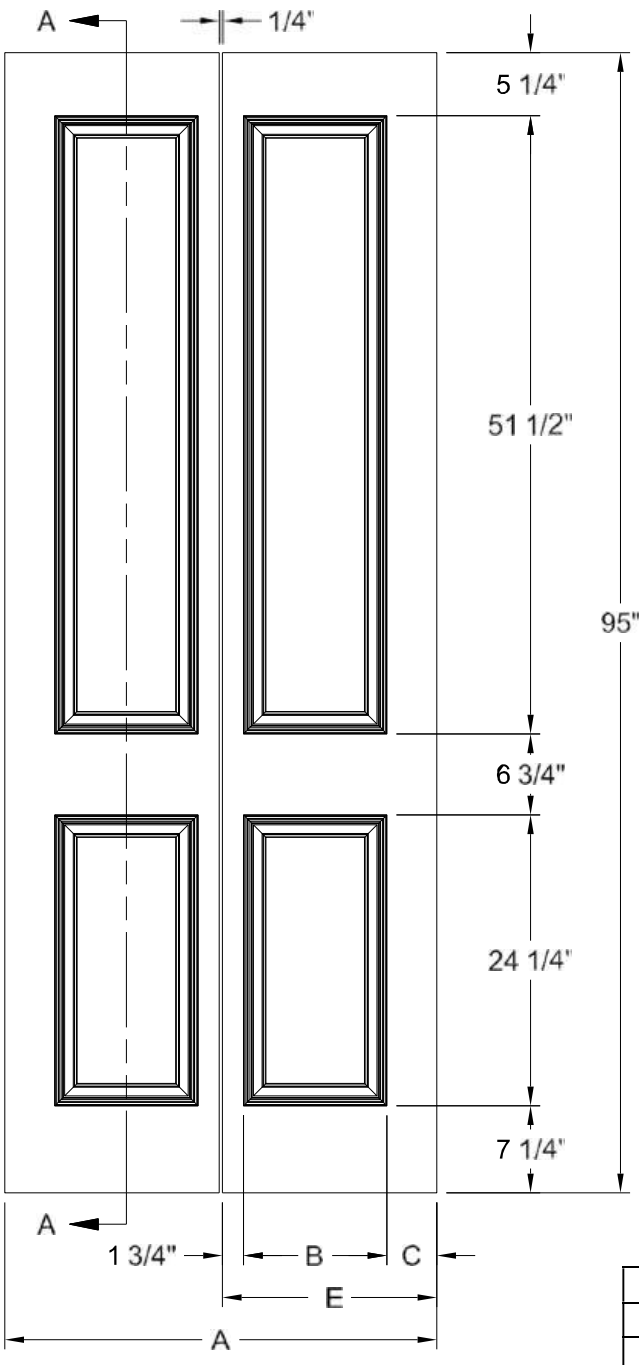

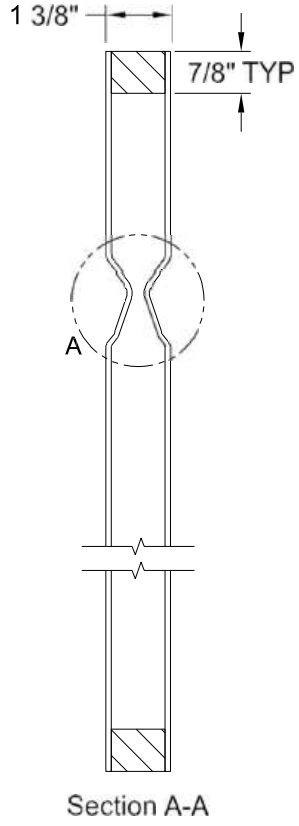

Section A-A

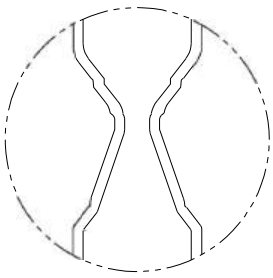

Detail A
INP Profile

Dimension Table				
Door Size	A	B	C	D
3'-0" x 8'-0"	36"	12"	4 1/8"	17 7/8"
2'-10" x 8'-0"	34"	10"	5 1/8"	16 7/8"
2'-8" x 8'-0"	32"	10"	4 1/8"	15 7/8"
2'-6" x 8'-0"	30"	9"	4 1/8"	14 7/8"
2'-4" x 8'-0"	28"	8"	4 1/8"	13 7/8"
2'-2" x 8'-0"	26"	6"	5 1/8"	12 7/8"
2'-0" x 8'-0"	24"	6"	4 1/8"	11 7/8"
1'-10" x 8'-0"	22"	6"	3 1/8"	10 7/8"

Product specifications may change without notice.
Questions? Consult JELD-WEN customer service.

CASHAL SMOOTH 6'-8"

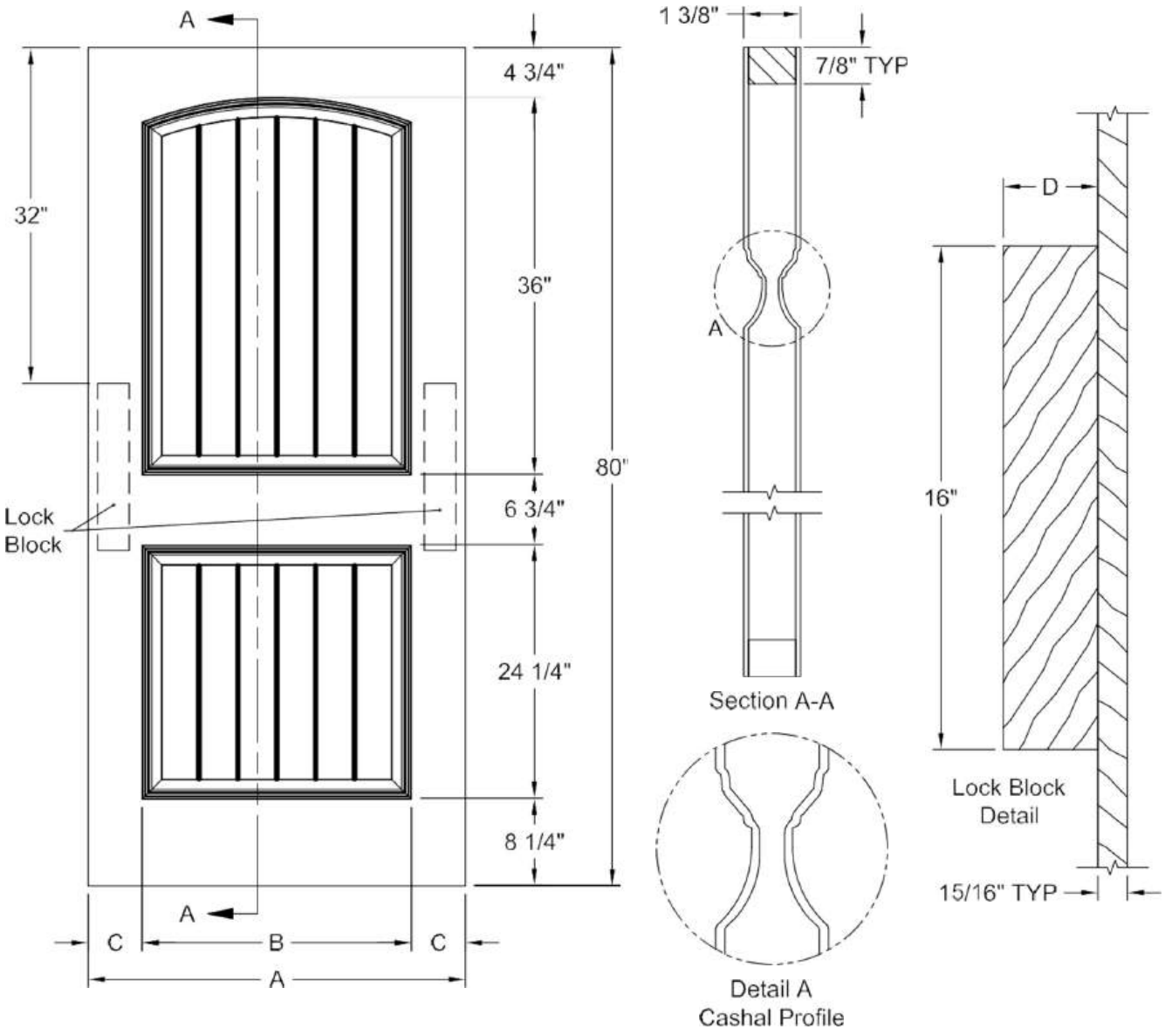

Dimension Table				
Door Size	A	B	C	D
3'-0" x 6'-8"	36"	25 5/8"	5 3/16"	3"
2'-10" x 6'-8"	34"	23 5/8"	5 3/16"	3"
2'-8" x 6'-8"	32"	23 5/8"	4 3/16"	3"
2'-6" x 6'-8"	30"	21 5/8"	4 3/16"	3"
2'-4" x 6'-8"	28"	19 5/8"	4 3/16"	3"
2'-2" x 6'-8"	26"	15 5/8"	5 3/16"	3"
2'-0" x 6'-8"	24"	15 5/8"	4 3/16"	3"
1'-10" x 6'-8"	22"	15 5/8"	3 3/16"	2 1/8"
1'-8" x 6'-8"	20"	12"	4"	3"
1'-6" x 6'-8"	18"	12"	3"	1 5/8"

CASHAL BIFOLD SMOOTH 6'-8"

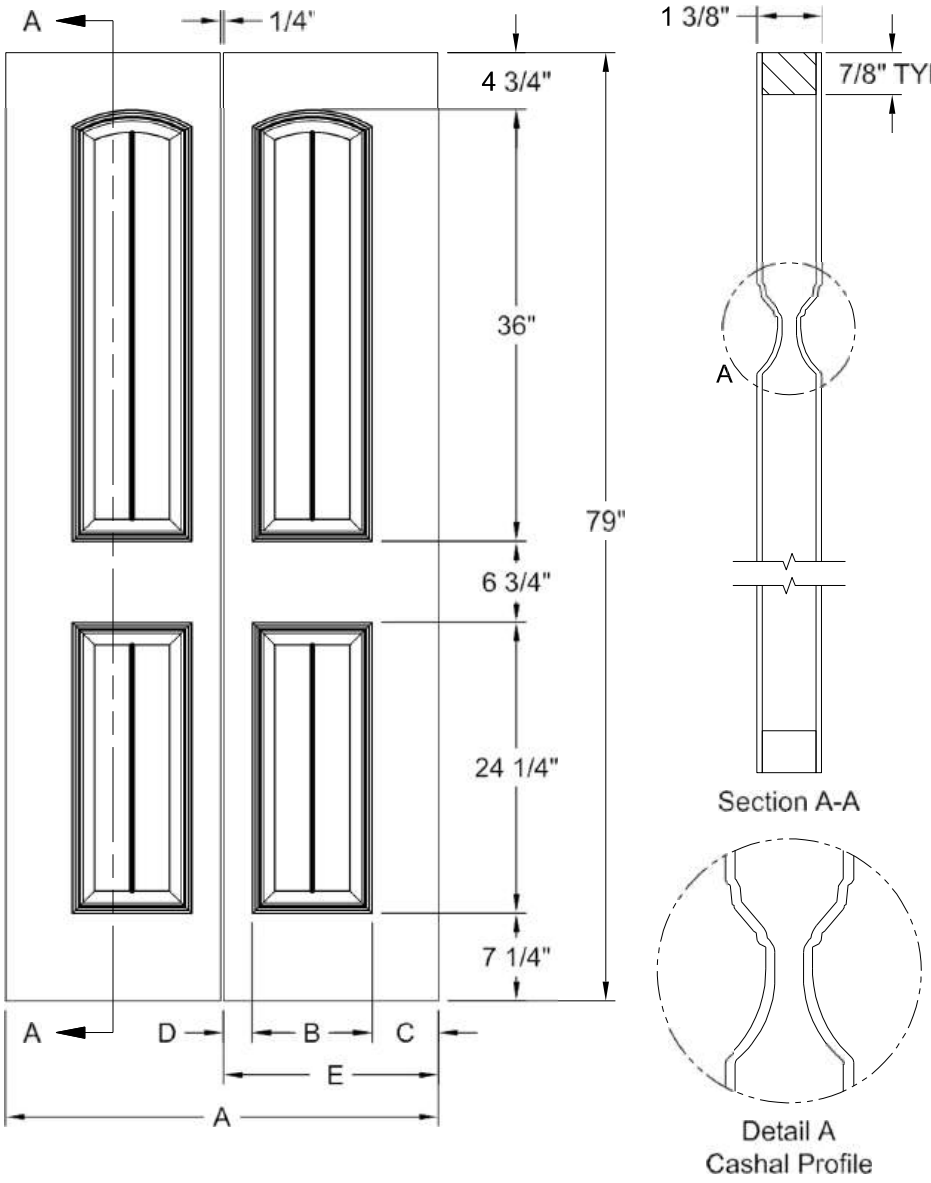

Dimension Table					
Door Size	A	B	C	D	E
3'-0" x 6'-8"	36"	10"	5 3/4"	2 1/8"	17 7/8"
2'-10" x 6'-8"	34"	10"	4 3/4"	2 1/8"	16 7/8"
2'-8" x 6'-8"	32"	10"	3 3/4"	2 1/8"	15 7/8"
2'-6" x 6'-8"	30"	10"	2 3/4"	2 1/8"	14 7/8"
2'-4" x 6'-8"	28"	10"	1 3/4"	2 1/8"	13 7/8"
2'-0" x 6'-8"	24"	8 3/16"	2 5/16"	1 3/8"	12 7/8"
1'-10" x 6'-8"	22"	8 3/16"	1 5/16"	1 3/8"	10 7/8"

CASHAL SMOOTH 7'-0"

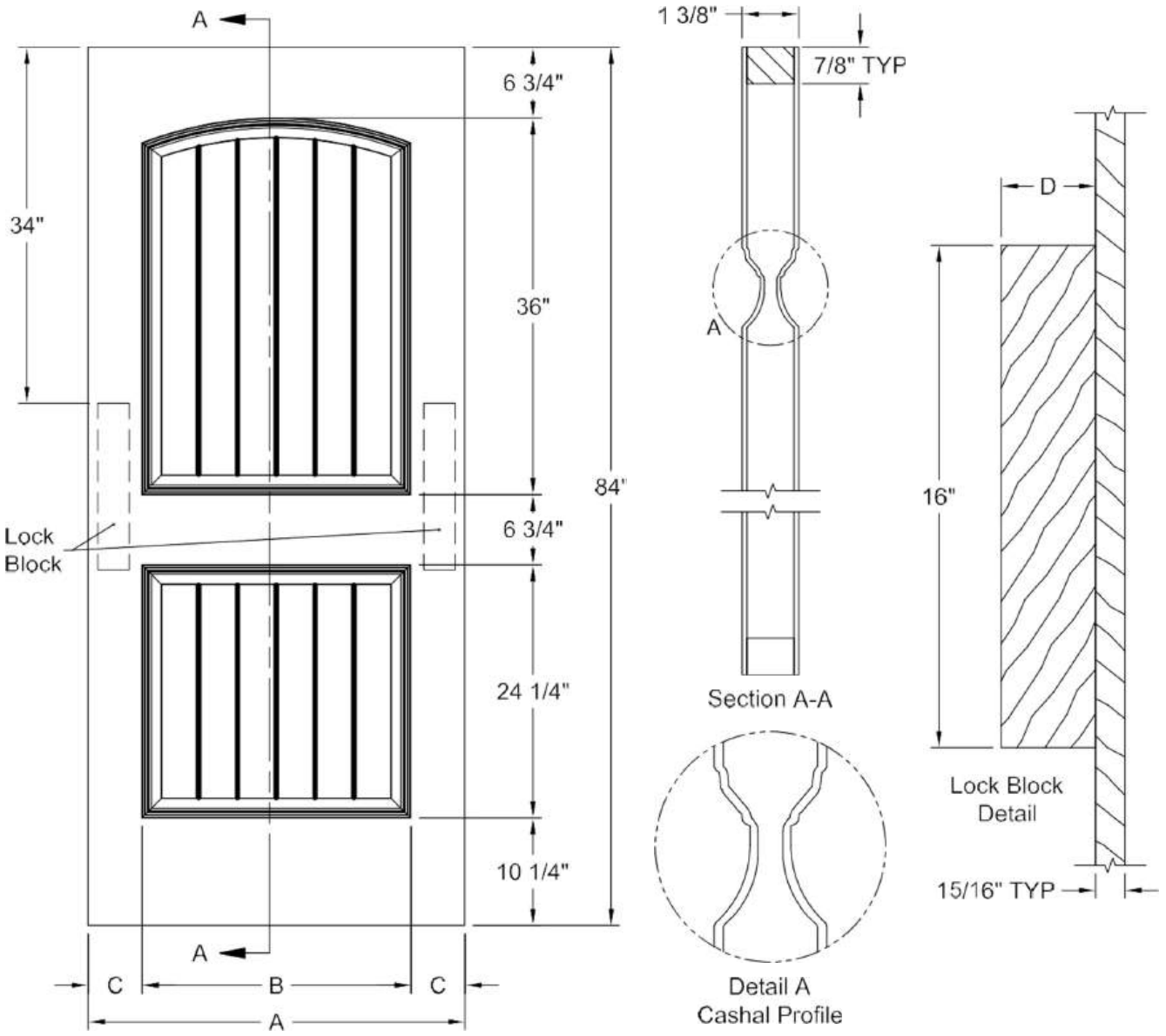

Dimension Table				
Door Size	A	B	C	D
3'-0" x 7'-0"	36"	25 5/8"	5 3/16"	3"
2'-10" x 7'-0"	34"	23 5/8"	5 3/16"	3"
2'-8" x 7'-0"	32"	23 5/8"	4 3/16"	3"
2'-6" x 7'-0"	30"	21 5/8"	4 3/16"	3"
2'-4" x 7'-0"	28"	19 5/8"	4 3/16"	3"
2'-2" x 7'-0"	26"	15 5/8"	5 3/16"	3"
2'-0" x 7'-0"	24"	15 5/8"	4 3/16"	3"
1'-10" x 7'-0"	22"	15 5/8"	3 3/16"	2 1/8"
1'-8" x 7'-0"	20"	12"	4"	3"
1'-6" x 7'-0"	18"	12"	3"	1 5/8"

CASHAL BIFOLD SMOOTH 7'-0"

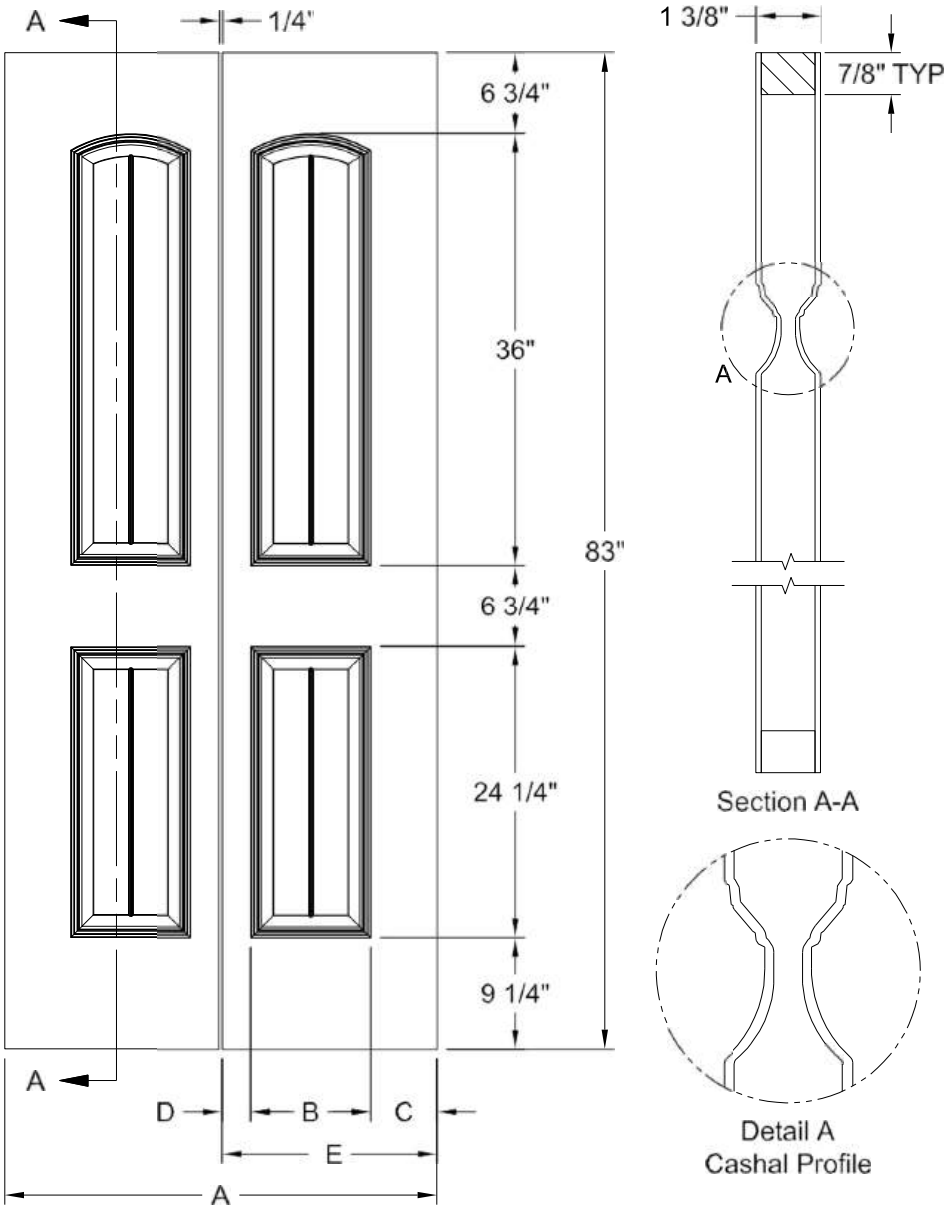

Dimension Table					
Door Size	A	B	C	D	E
3'-0" x 7'-0"	36"	10"	5 3/4"	2 3/8"	17 7/8"
2'-10" x 7'-0"	34"	10"	4 3/4"	2 3/8"	16 7/8"
2'-8" x 7'-0"	32"	10"	3 3/4"	2 3/8"	15 7/8"
2'-6" x 7'-0"	30"	10"	2 3/4"	2 3/8"	14 7/8"
2'-4" x 7'-0"	28"	10"	1 3/4"	2 3/8"	13 7/8"
2'-0" x 7'-0"	24"	8 3/16"	2 5/16"	1 3/8"	11 7/8"
1'-10" x 7'-9"	24"	8 3/16"	1 5/16"	1 3/8"	10 7/8"

CASHAL SMOOTH 8'-0"

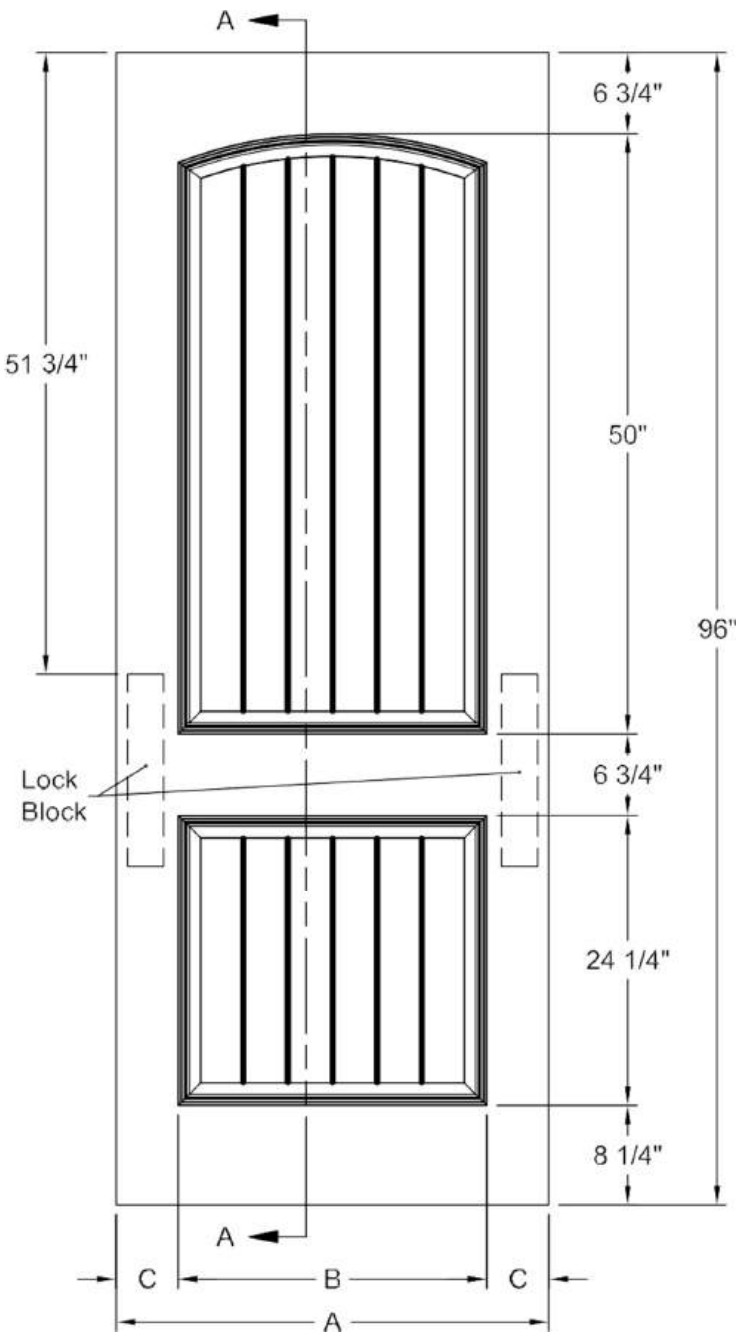

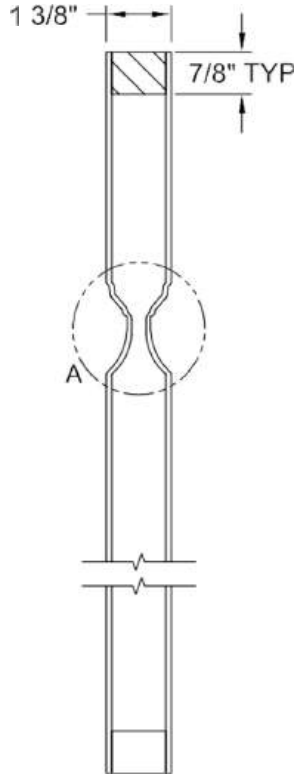

Section A-A

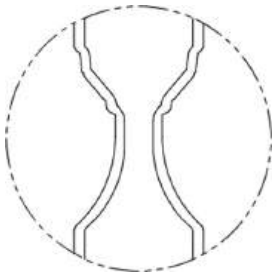

Detail A
Cashal Profile

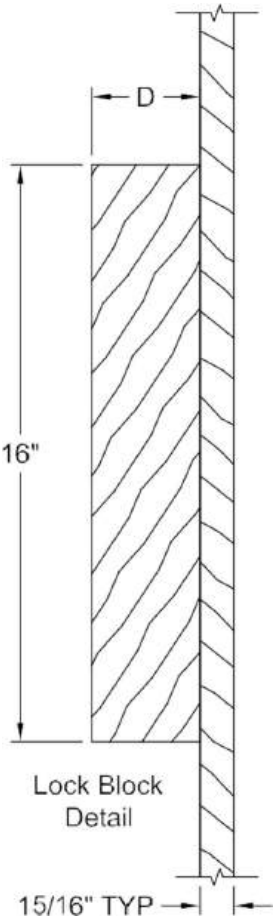

Dimension Table				
Door Size	A	B	C	D
3'-0" x 8'-0"	36"	25 5/8"	5 3/16"	3"
2'-10" x 8'-0"	34"	23 5/8"	5 3/16"	3"
2'-8" x 8'-0"	32"	23 5/8"	4 3/16"	3"
2'-6" x 8'-0"	30"	21 5/8"	4 3/16"	3"
2'-4" x 8'-0"	28"	19 5/8"	4 3/16"	3"
2'-2" x 8'-0"	26"	15 5/8"	5 3/16"	3"
2'-0" x 8'-0"	24"	15 5/8"	4 3/16"	3"
1'-10" x 8'-0"	22"	15 5/8"	3 3/16"	2 1/8"
1'-8" x 8'-0"	20"	12"	4"	3"
1'-6" x 8'-0"	18"	12"	3"	1 5/8"

CASHAL BIFOLD SMOOTH 8'-0"

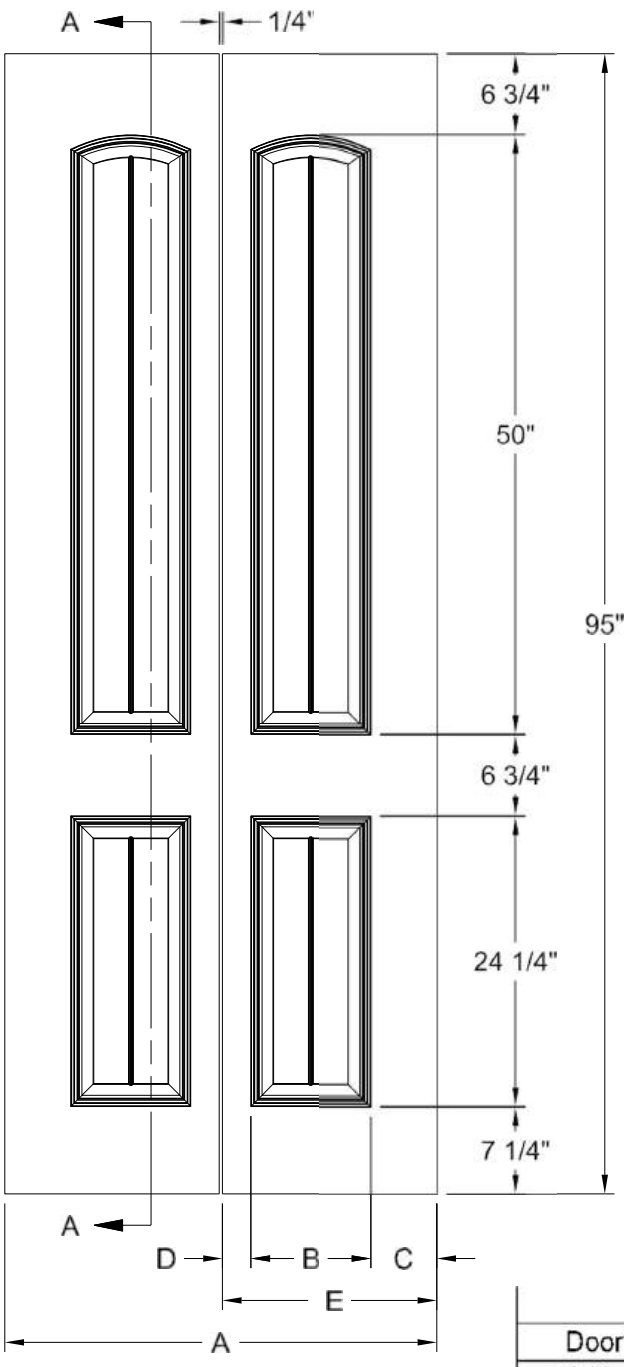

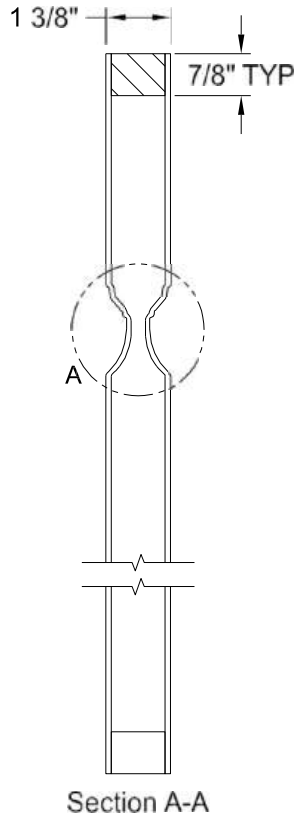

Section A-A

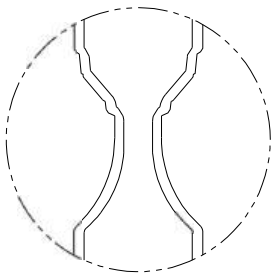

Detail A
Cashal Profile

Dimension Table

Door Size	A	B	C	D	E
3'-0" x 8'-0"	36"	10"	5 3/4"	2 3/8"	17 7/8"
2'-10" x 8'-0"	34"	10"	4 3/4"	2 3/8"	16 7/8"
2'-8" x 8'-0"	32"	10"	3 3/4"	2 3/8"	15 7/8"
2'-6" x 8'-0"	30"	10"	2 3/4"	2 3/8"	14 7/8"
2'-4" x 8'-0"	28"	10"	1 3/4"	1 3/8"	13 7/8"
2'-0" x 8'-0"	24"	8 3/16"	2 5/16"	1 3/8"	11 7/8"
1'-10" x 8'-0"	22"	8 3/16"	1 5/16"	1 3/4"	10 7/8"

COLONIST SMOOTH 6'-8"

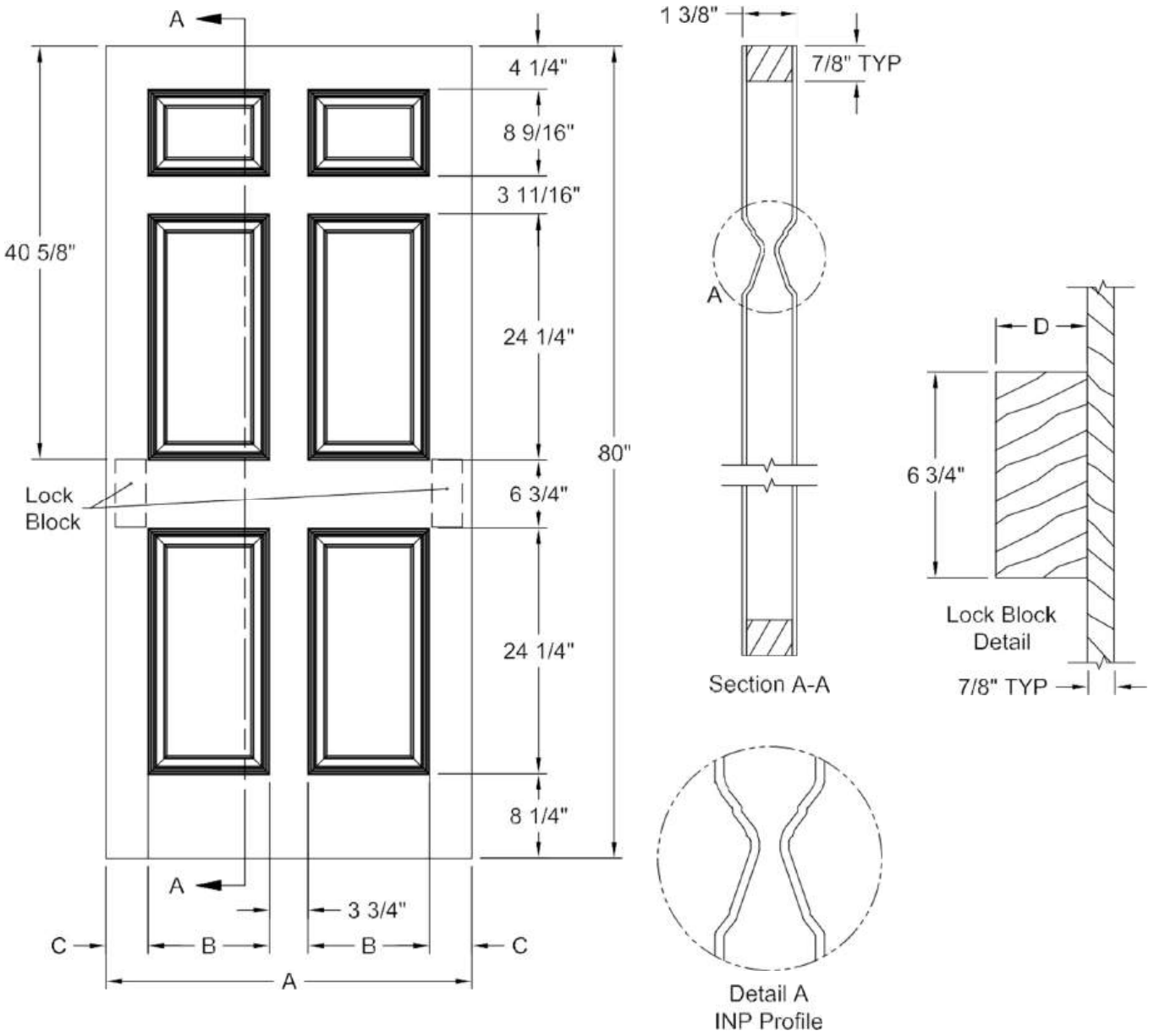

Dimension Table				
Door Size	A	B	C	D
3'-0" x 6'-8"	36"	12"	4 1/8"	3"
2'-10" x 6'-8"	34"	10"	5 1/8"	3"
2'-8" x 6'-8"	32"	10"	4 1/8"	3"
2'-6" x 6'-8"	30"	9"	4 1/8"	3"
2'-4" x 6'-8"	28"	8"	4 1/8"	3"
2'-2" x 6'-8"	26"	6"	5 1/8"	3"
2'-0" x 6'-8"	24"	6"	4 1/8"	3"
1'-10" x 6'-8"	22"	6"	3 1/8"	2 1/8"

COLONIST SMOOTH 6'-8"

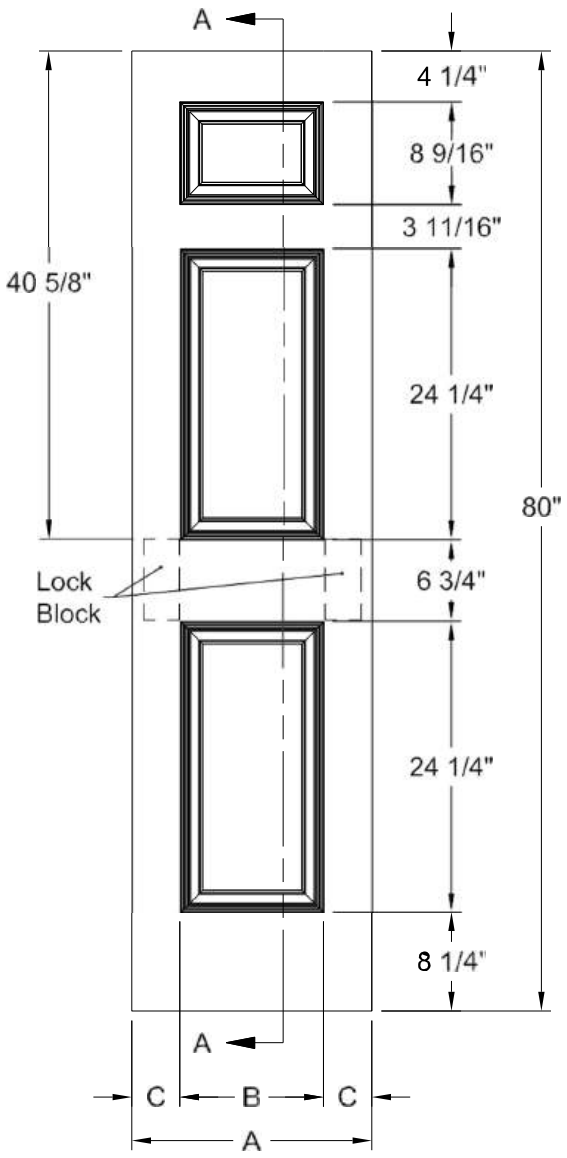

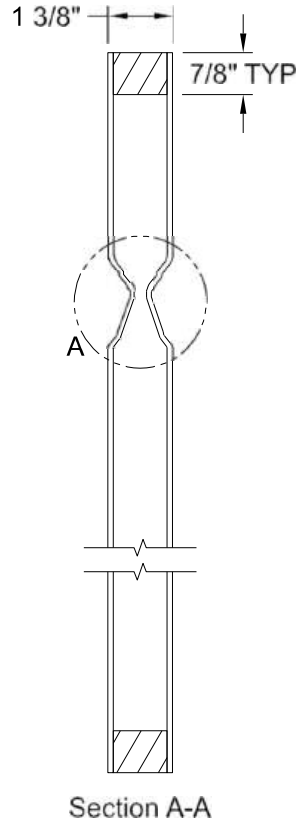

Section A-A

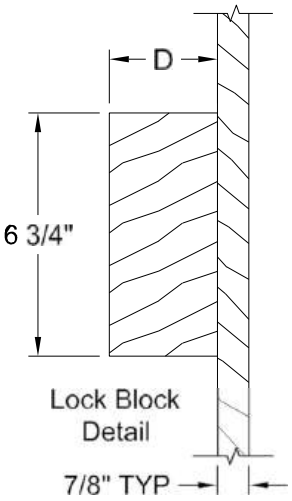

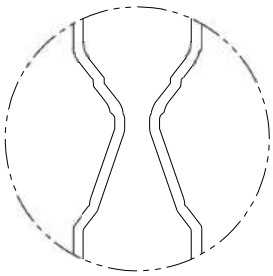

Detail A
INP Profile

Dimension Table				
Door Size	A	B	C	D
1'-8" x 6'-8"	20"	12"	4"	3"
1'-6" x 6'-8"	18"	12"	3"	1 5/8"
1'-4" x 6'-8"	16"	7"	4 1/2"	3"
1'-3" x 6'-8"	15"	7"	4"	3"
1'-2" x 6'-8"	14"	7"	3 1/2"	2 1/8"
1'-0" x 6'-8"	12"	7"	2 1/2"	1 3/8"

COLONIST BIFOLD SMOOTH 6'-8"

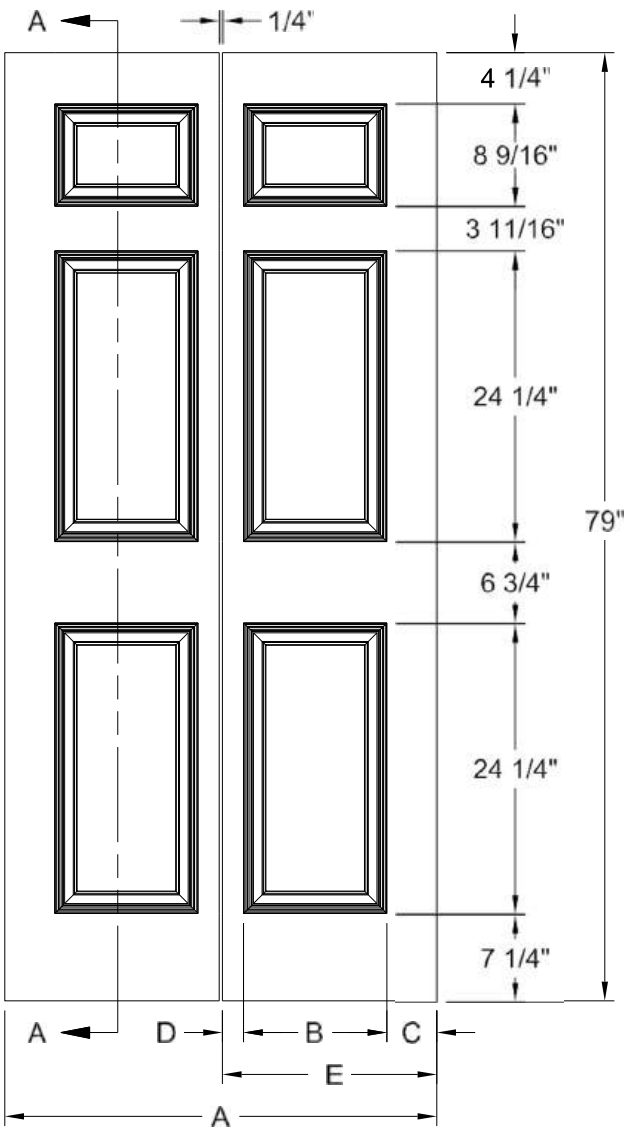

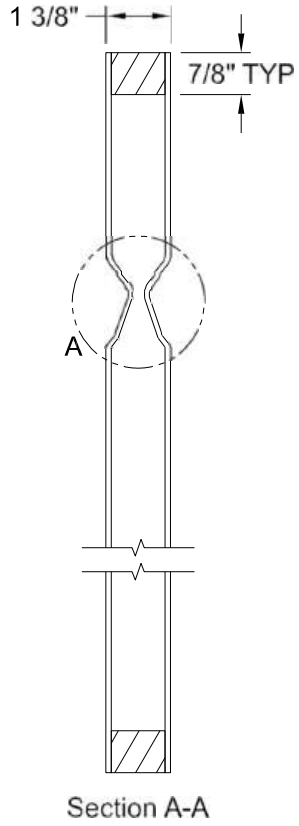

Section A-A

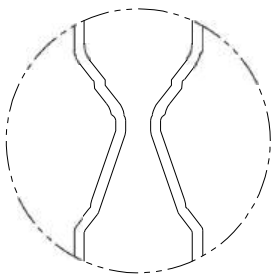

Detail A
INP Profile

Dimension Table

Door Size	A	B	C	D	E
3'-0" x 6'-8"	36"	12"	4 1/8"	1 3/4"	17 7/8"
2'-10" x 6'-8"	34"	10"	5 1/8"	1 3/4"	16 7/8"
2'-8" x 6'-8"	32"	10"	4 1/8"	1 3/4"	15 7/8"
2'-6" x 6'-8"	30"	9"	4 1/8"	1 3/4"	14 7/8"
2'-4" x 6'-8"	28"	8"	4 1/8"	1 3/4"	13 7/8"
2'-2" x 6'-8"	26"	6"	5 1/8"	1 3/4"	12 7/8"
2'-0" x 6'-8"	24"	6"	4 1/8"	1 3/4"	11 7/8"
1'-10" x 6'-8"	22"	6"	3 1/8"	1 3/4"	10 7/8"

COLONIST SMOOTH 7'-0"

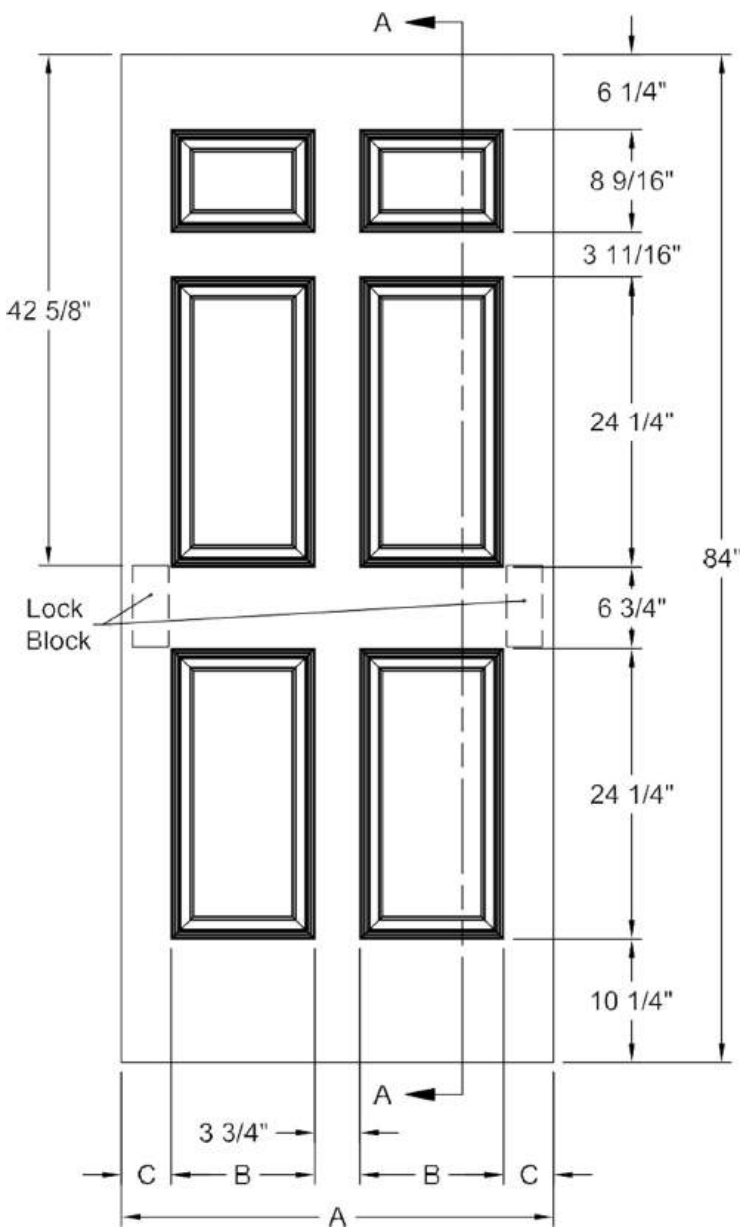

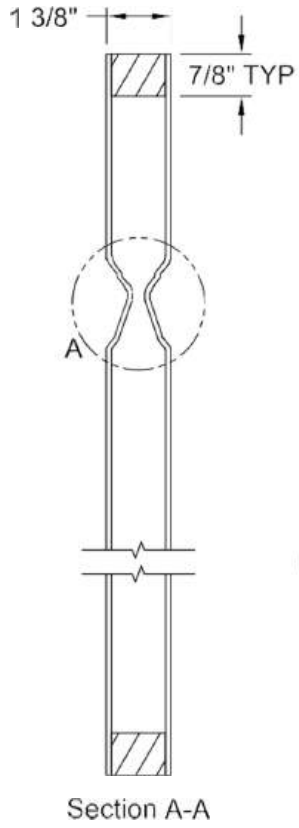

Section A-A

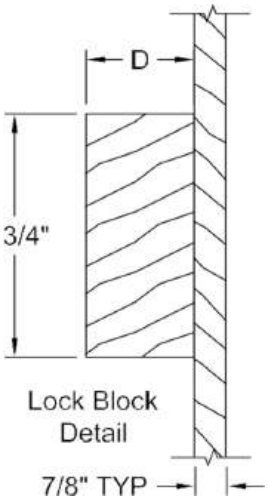

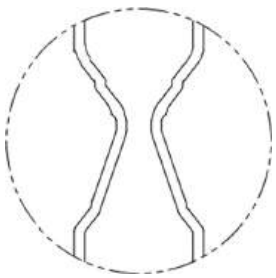

Detail A
INP Profile

Dimension Table				
Door Size	A	B	C	D
3'-0" x 7'-0"	36"	12"	4 1/8"	3"
2'-10" x 7'-0"	34"	10"	5 1/8"	3"
2'-8" x 7'-0"	32"	10"	4 1/8"	3"
2'-6" x 7'-0"	30"	9"	4 1/8"	3"
2'-4" x 7'-0"	28"	8"	4 1/8"	3"
2'-2" x 7'-0"	26"	6"	5 1/8"	3"
2'-0" x 7'-0"	24"	6"	4 1/8"	3"
1'-10" x 7'-0"	22"	6"	3 1/8"	2 1/8"

COLONIST SMOOTH 7'-0"

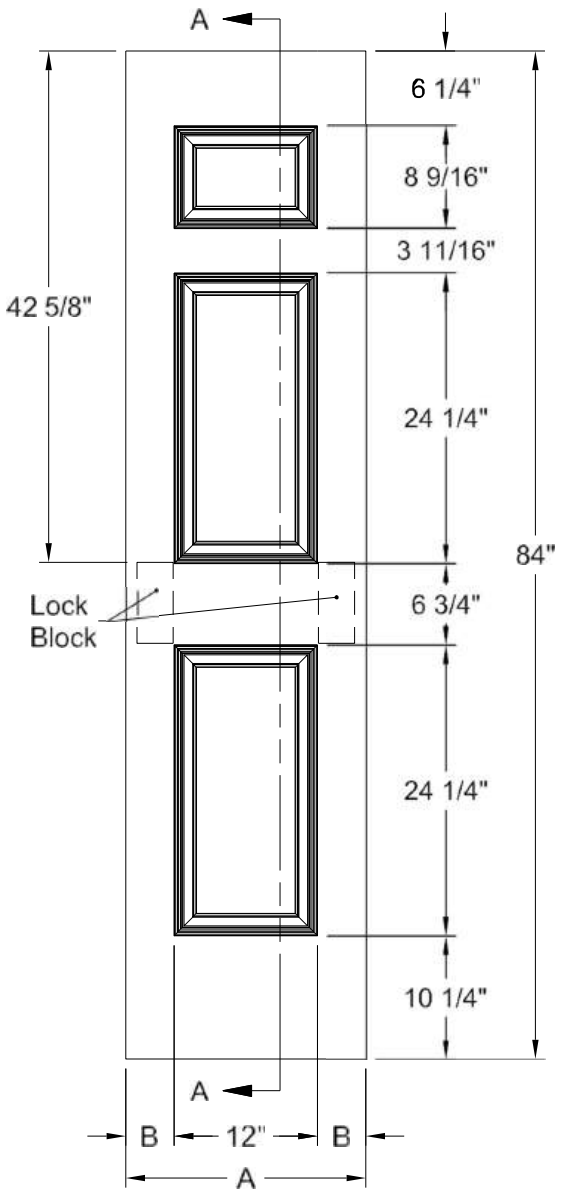

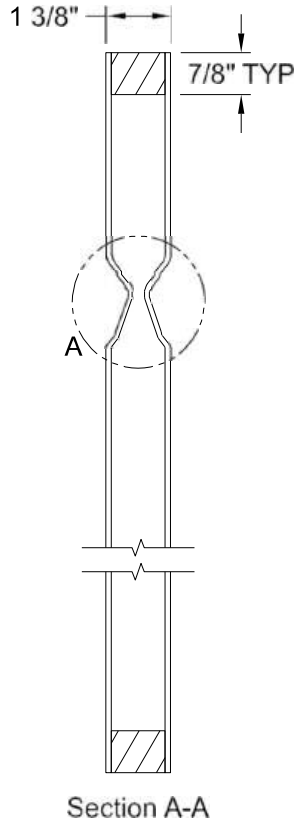

Section A-A

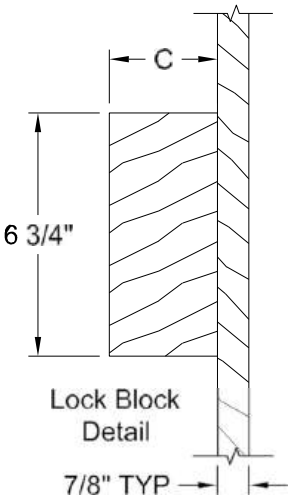

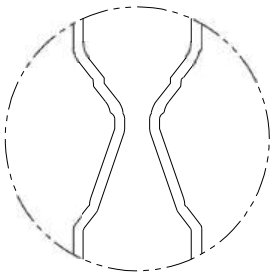

Detail A
INP Profile

Dimension Table			
Door Size	A	B	C
1'-8" x 7'-0"	20"	4"	3"
1'-6" x 7'-0"	18"	3"	1 5/8"

COLONIST BIFOLD SMOOTH 7'-0"

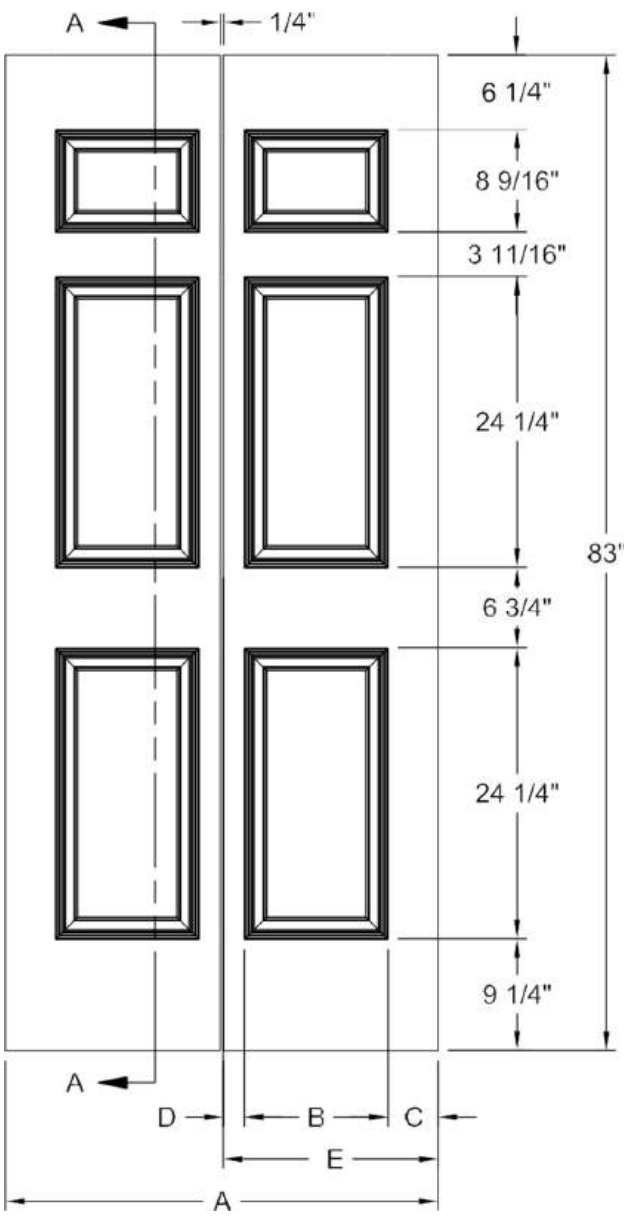

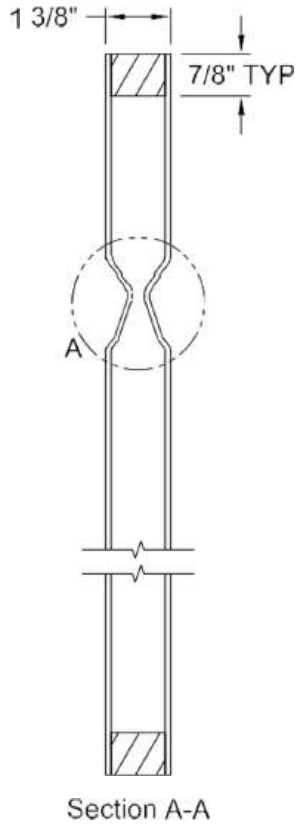

Section A-A

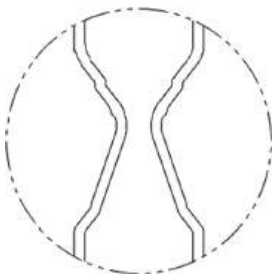

Detail A
INP Profile

Dimension Table					
Door Size	A	B	C	D	E
3'-0" x 7'-0"	36"	12"	4 1/8"	1 3/4"	17 7/8"
2'-10" x 7'-0"	34"	10"	5 1/8"	1 3/4"	16 7/8"
2'-8" x 7'-0"	32"	10"	4 1/8"	1 3/4"	15 7/8"
2'-6" x 7'-0"	30"	9"	4 1/8"	1 3/4"	14 7/8"
2'-4" x 7'-0"	28"	8"	4 1/8"	1 3/4"	13 7/8"
2'-2" x 7'-0"	26"	6"	5 1/8"	1 3/4"	11 7/8"
2'-0" x 7'-0"	24"	6"	4 1/8"	1 3/4"	10 7/8"
1'-10" x 7'-0"	22"	6"	3 1/8"	1 3/4"	10 7/8"

COLONIST SMOOTH 8'-0"

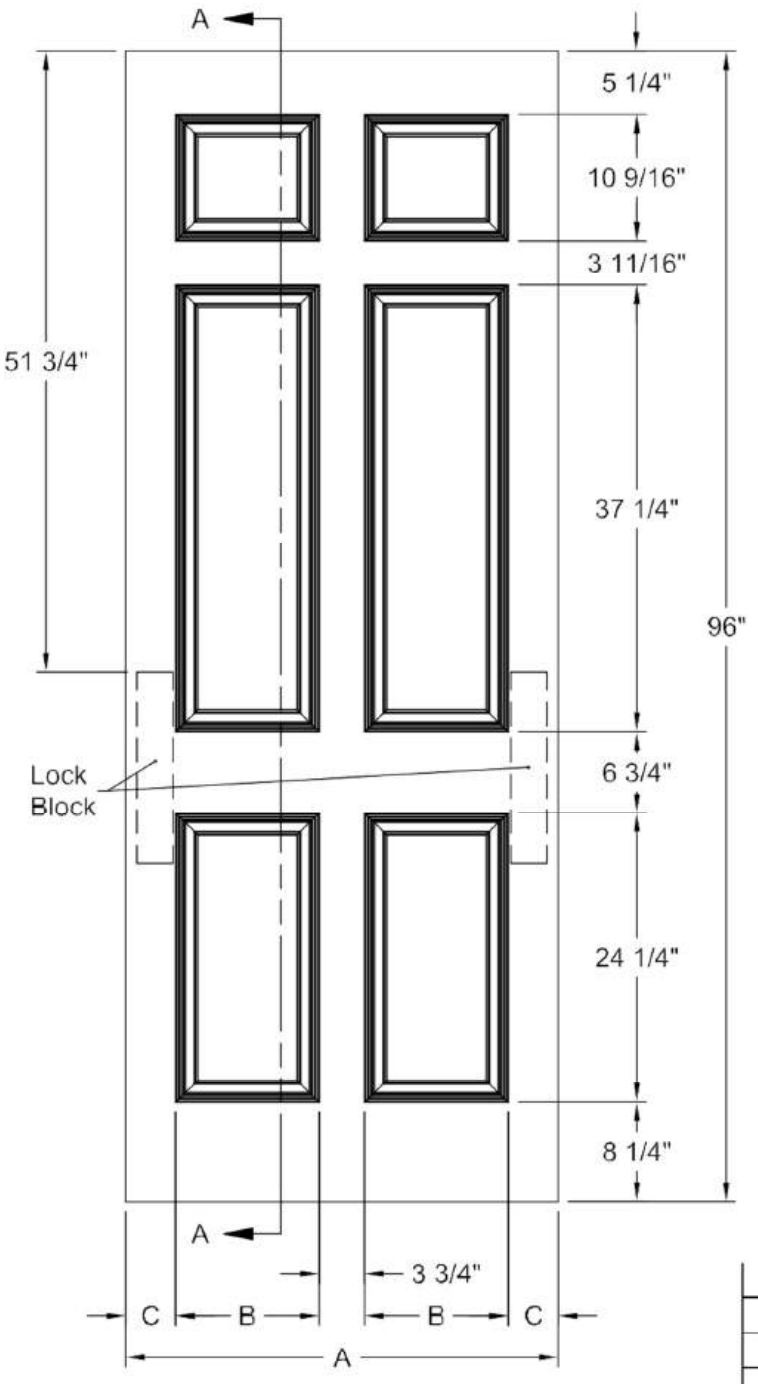

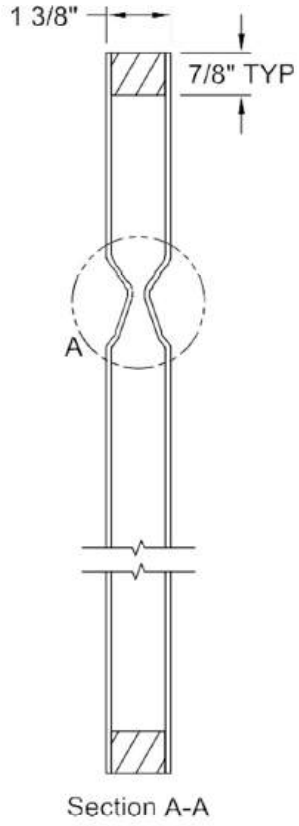

Section A-A

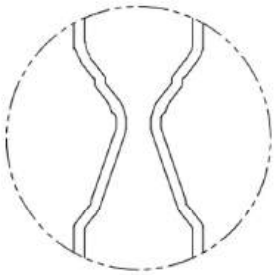

Detail A
INP Profile

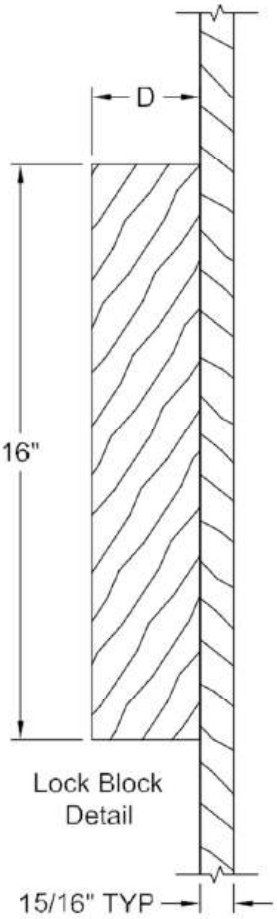

Dimension Table

Door Size	A	B	C	D
3'-0" x 8'-0"	36"	12"	4 1/8"	3"
2'-10" x 8'-0"	34"	10"	5 1/8"	3"
2'-8" x 8'-0"	32"	10"	4 1/8"	3"
2'-6" x 8'-0"	30"	9"	4 1/8"	3"
2'-4" x 8'-0"	28"	8"	4 1/8"	3"
2'-2" x 8'-0"	26"	6"	5 1/8"	3"
2'-0" x 8'-0"	24"	6"	4 1/8"	3"
1'-10" x 8'-0"	22"	6"	3 1/8"	2 1/8"

COLONIST SMOOTH 8'-0"

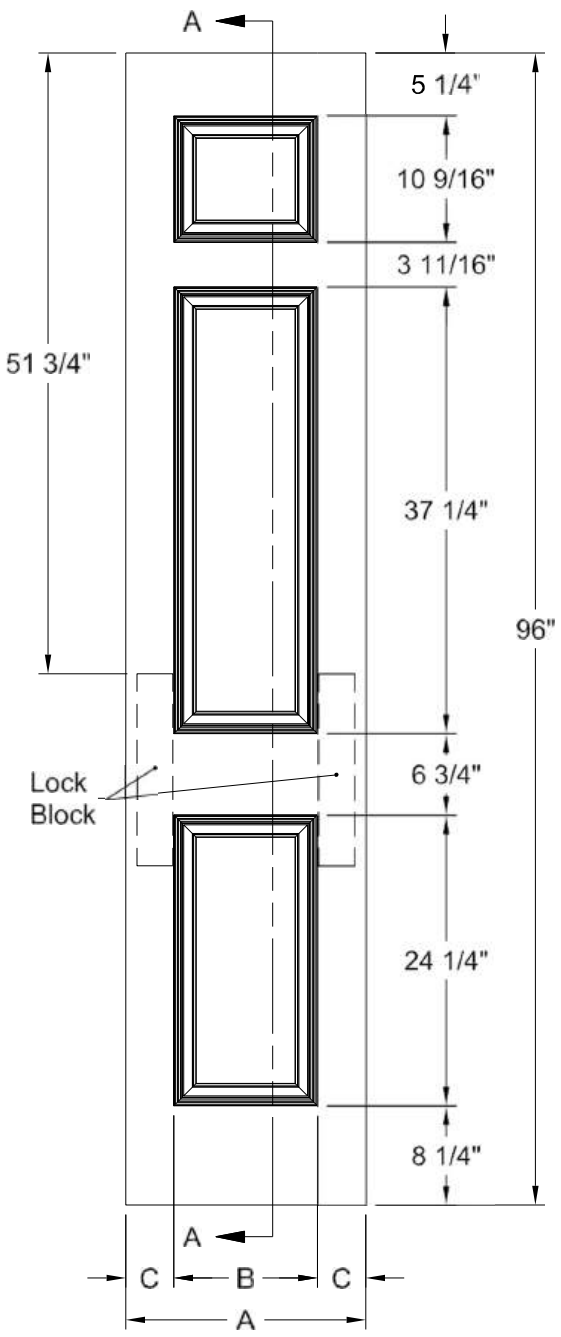

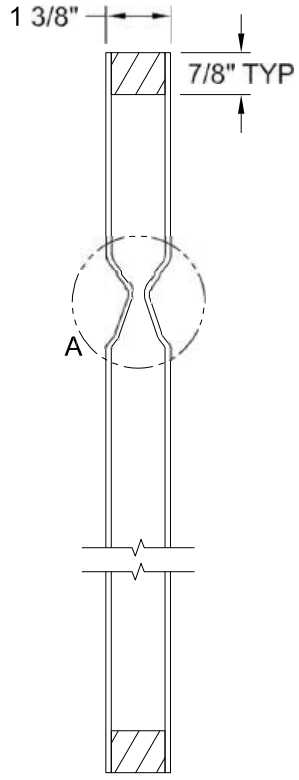

Section A-A

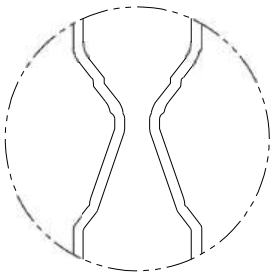

Detail A
INP Profile

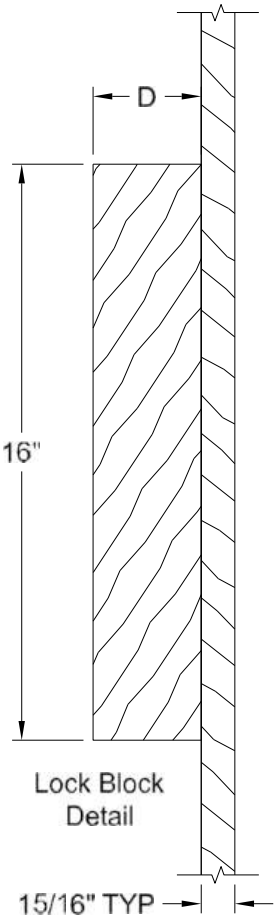

Lock Block
Detail

Dimension Table				
Door Size	A	B	C	D
1'-8" x 8'-0"	20"	12"	4"	3"
1'-6" x 8'-0"	18"	12"	3"	1 5/8"
1'-4" x 8'-0"	16"	7"	4 1/2"	3"
1'-3" x 6'-8"	15"	7"	4"	3"
1'-2" x 6'-8"	14"	7"	3 1/2"	2 1/8"
1'-0" x 6'-8"	12"	7"	2 1/2"	1 3/8"

COLONIST BIFOLD SMOOTH 8'-0"

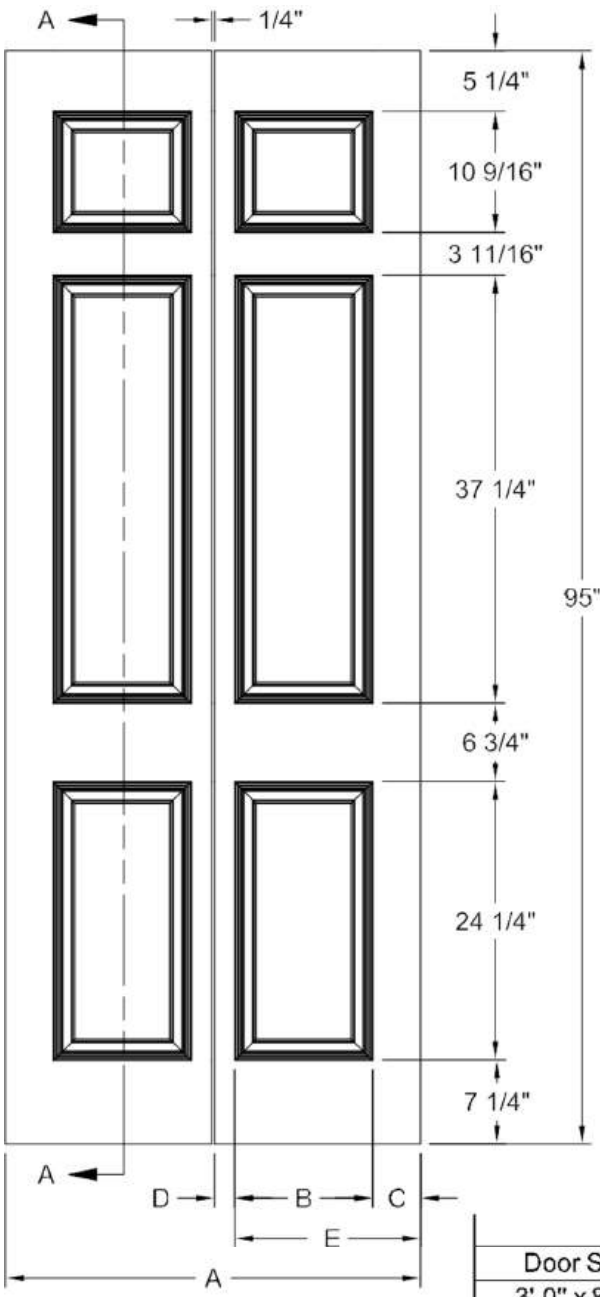

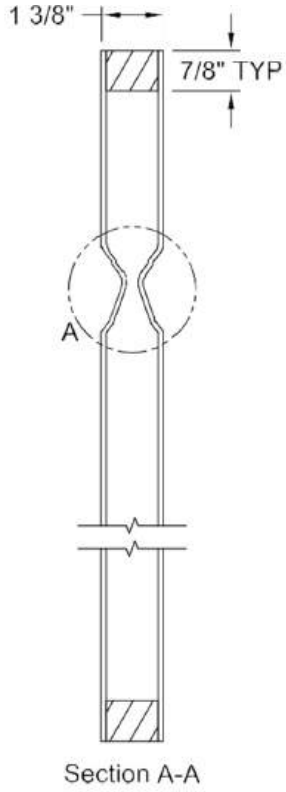

Section A-A

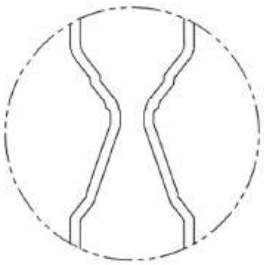

Detail A
INP Profile

Dimension Table

Door Size	A	B	C	D	E
3'-0" x 8'-0"	36"	10"	5 3/4"	2 3/8"	17 7/8"
2'-10" x 8'-0"	34"	10"	4 3/4"	2 3/8"	16 7/8"
2'-8" x 8'-0"	32"	10"	3 3/4"	2 3/8"	15 7/8"
2'-6" x 8'-0"	30"	10"	2 3/4"	2 3/8"	14 7/8"
2'-4" x 8'-0"	28"	10"	1 3/4"	1 3/8"	13 7/8"
2'-2" x 8'-0"	26"	6"	5 1/8"	1 3/4"	12 7/8"
2'-0" x 8'-0"	24"	6"	4 1/8"	1 3/4"	11 7/8"
1'-10" x 8'-0"	22"	6"	3 1/8"	1 3/4"	10 7/8"

COLONIST PINE GRAIN 6'-8"

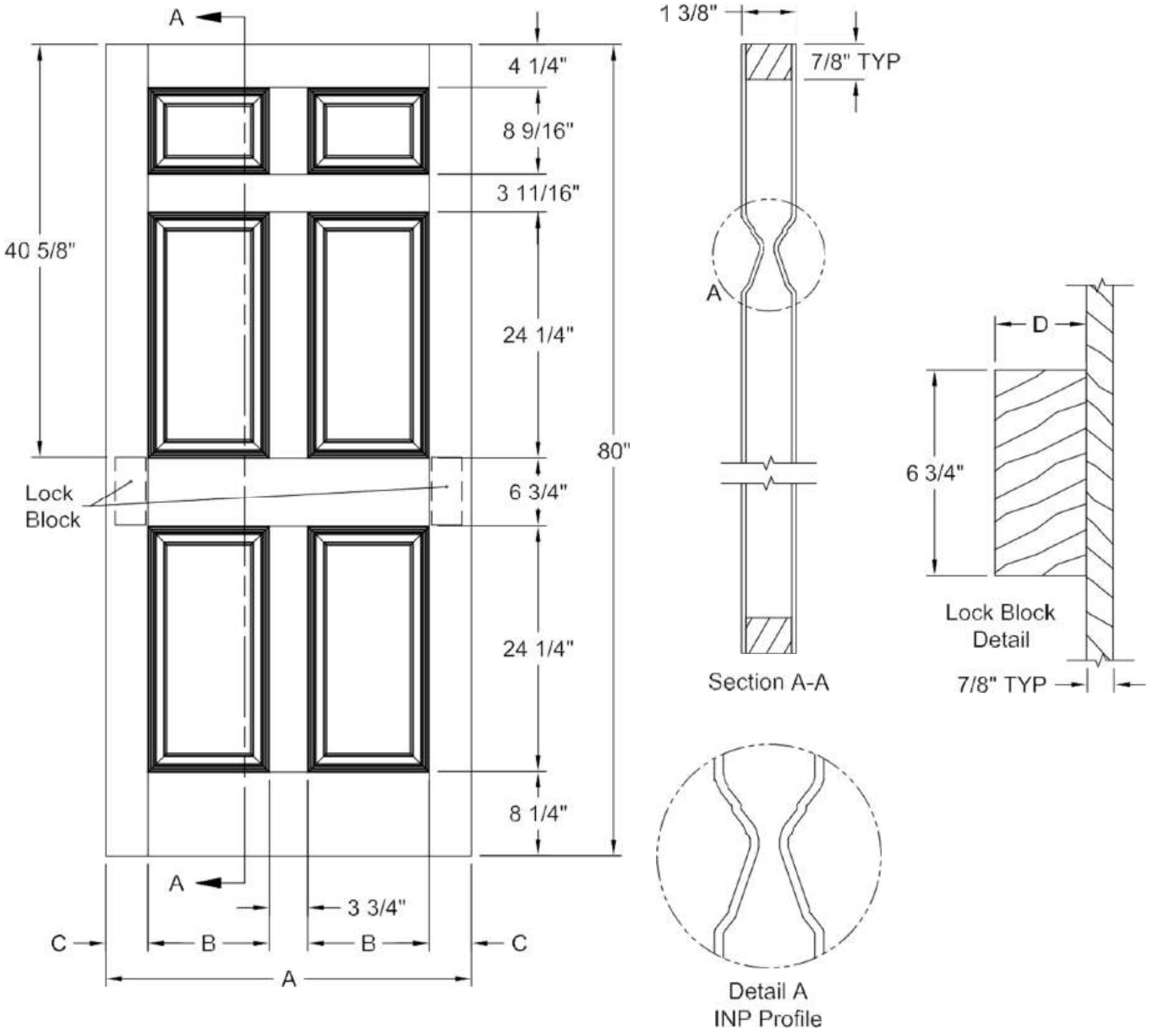

Dimension Table				
Door Size	A	B	C	D
3'-0" x 6'-8"	36"	12"	4 1/8"	3"
2'-10" x 6'-8"	34"	10"	5 1/8"	3"
2'-8" x 6'-8"	32"	10"	4 1/8"	3"
2'-6" x 6'-8"	30"	9"	4 1/8"	3"
2'-4" x 6'-8"	28"	8"	4 1/8"	3"
2'-2" x 6'-8"	26"	6"	5 1/8"	3"
2'-0" x 6'-8"	24"	6"	4 1/8"	3"
1'-10" x 6'-8"	22"	6"	3 1/8"	2 1/8"

COLONIST PINE GRAIN 6'-8"

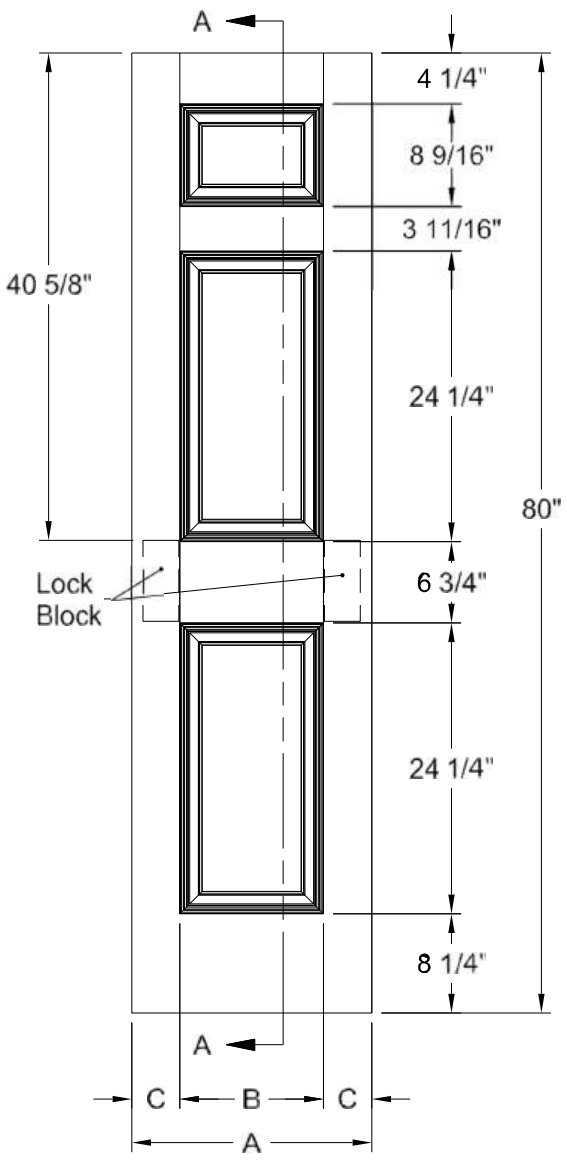

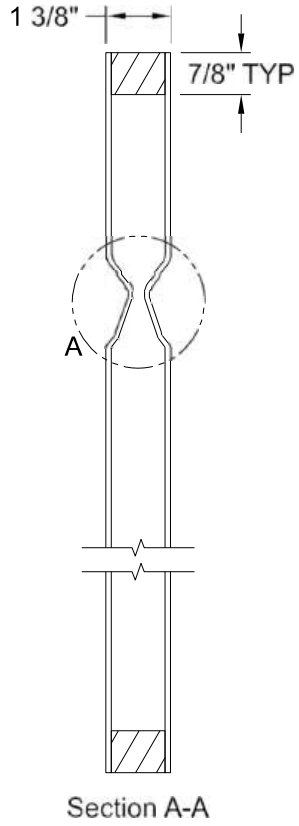

Section A-A

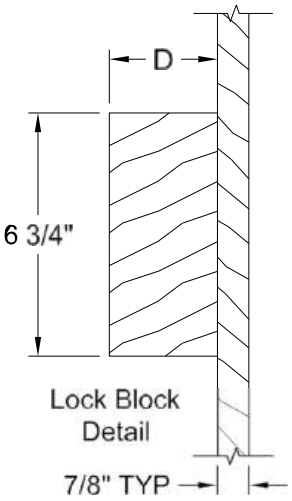

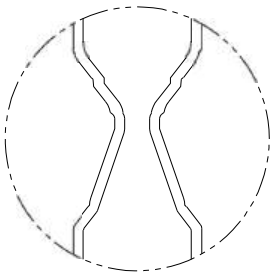

Detail A
INP Profile

Dimension Table				
Door Size	A	B	C	D
1'-8" x 6'-8"	20"	12"	4"	3"
1'-6" x 6'-8"	18"	12"	3"	1 5/8"
1'-4" x 6'-8"	16"	7"	4 1/2"	3"
1'-3" x 6'-8"	15"	7"	4"	3"
1'-2" x 6'-8"	14"	7"	3 1/2"	2 1/8"
1'-0" x 6'-8"	12"	7"	2 1/2"	1 3/8"

COLONIST BIFOLD PINE GRAIN 6'-8"

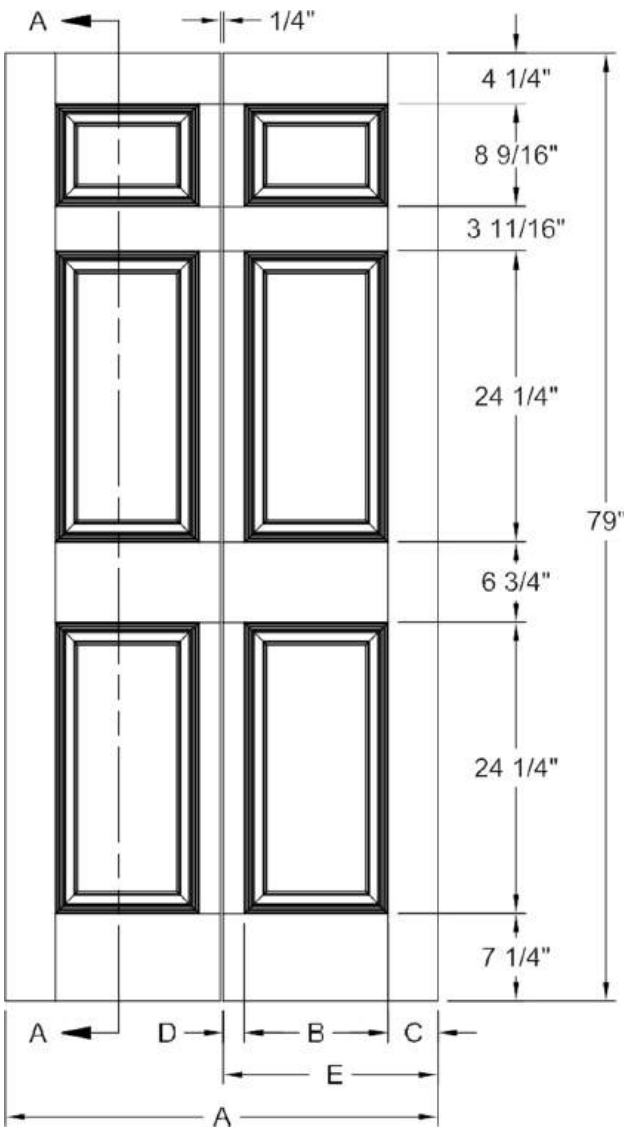

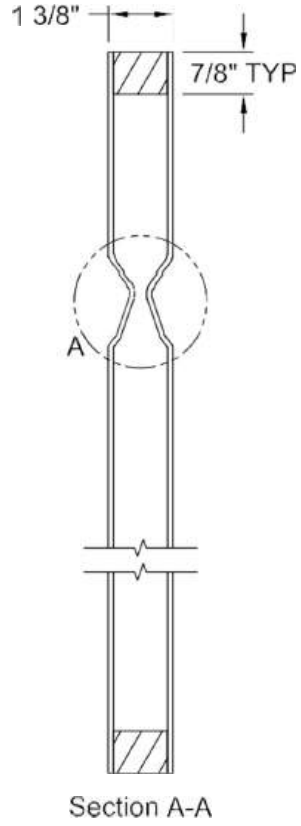

Section A-A

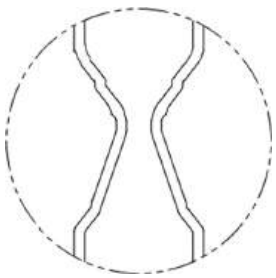

Detail A
INP Profile

Dimension Table					
Door Size	A	B	C	D	E
3'-0" x 6'-8"	36"	12"	4 1/8"	1 3/4"	17 7/8"
2'-10" x 6'-8"	34"	10"	5 1/8"	1 3/4"	16 7/8"
2'-8" x 6'-8"	32"	10"	4 1/8"	1 3/4"	15 7/8"
2'-6" x 6'-8"	30"	9"	4 1/8"	1 3/4"	14 7/8"
2'-4" x 6'-8"	28"	8"	4 1/8"	1 3/4"	13 7/8"
2'-2" x 6'-8"	26"	6"	5 1/8"	1 3/4"	12 7/8"
2'-0" x 6'-8"	24"	6"	4 1/8"	1 3/4"	11 7/8"
1'-10" x 6'-8"	22"	6"	3 1/8"	1 3/4"	10 7/8"

COLONIST PINE GRAIN 7'-0"

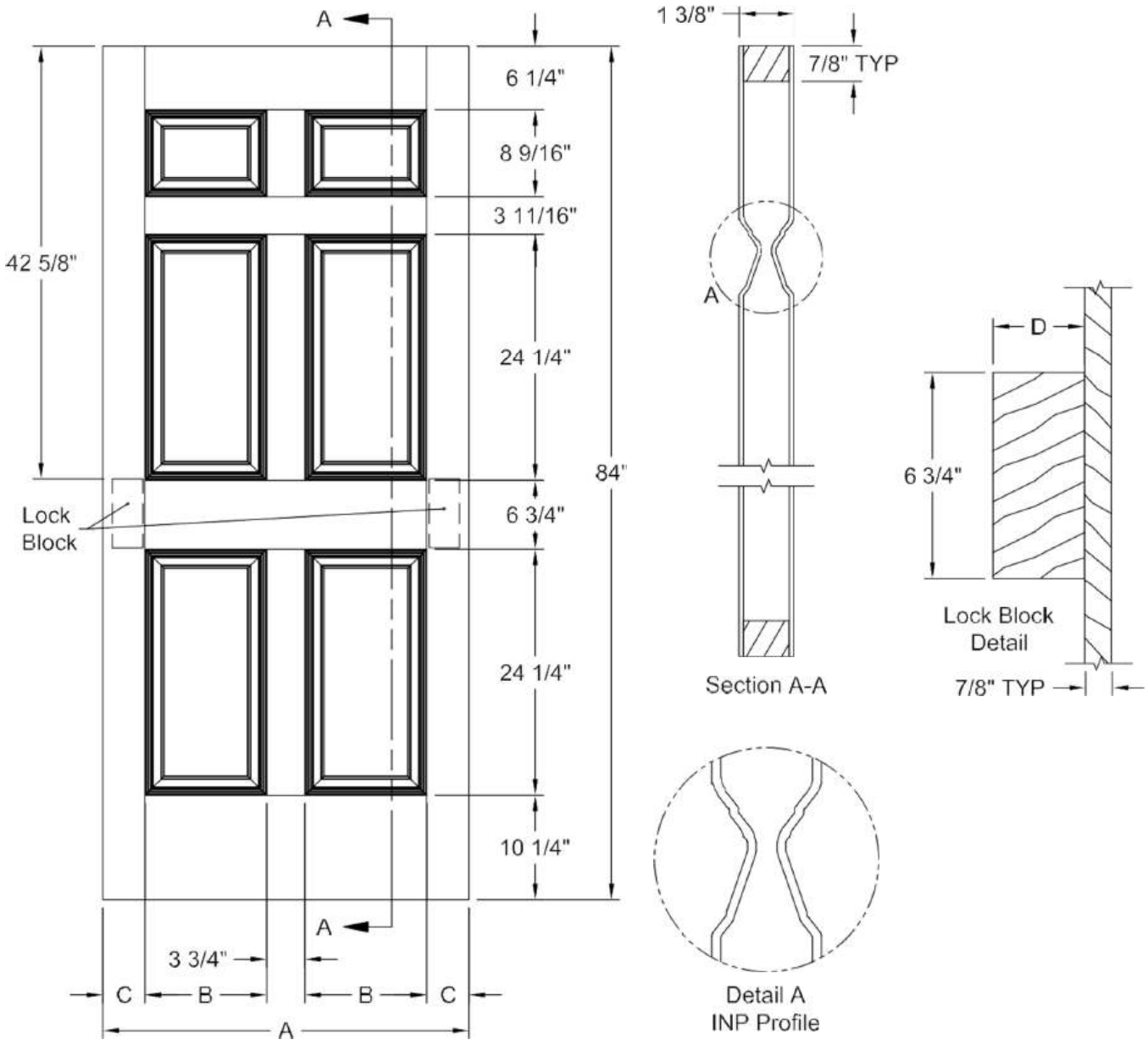

Dimension Table				
Door Size	A	B	C	D
3'-0" x 7'-0"	36"	12"	4 1/8"	3"
2'-10" x 7'-0"	34"	10"	5 1/8"	3"
2'-8" x 7'-0"	32"	10"	4 1/8"	3"
2'-6" x 7'-0"	30"	9"	4 1/8"	3"
2'-4" x 7'-0"	28"	8"	4 1/8"	3"
2'-2" x 7'-0"	26"	6"	5 1/8"	3"
2'-0" x 7'-0"	24"	6"	4 1/8"	3"
1'-10" x 7'-0"	22"	6"	3 1/8"	2 1/8"

COLONIST PINE GRAIN 7'-0"

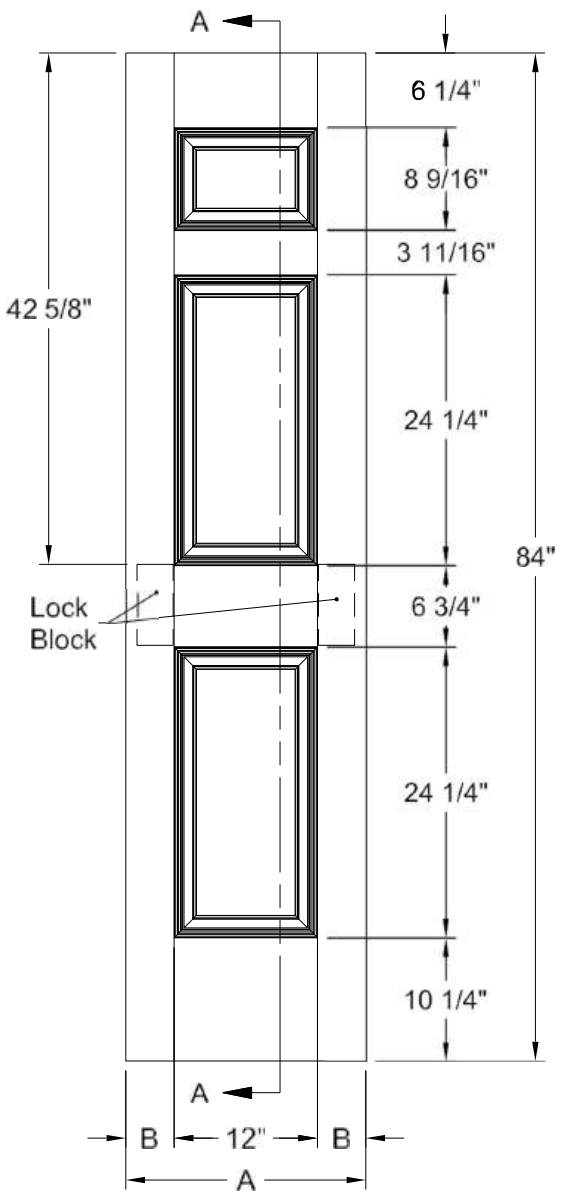

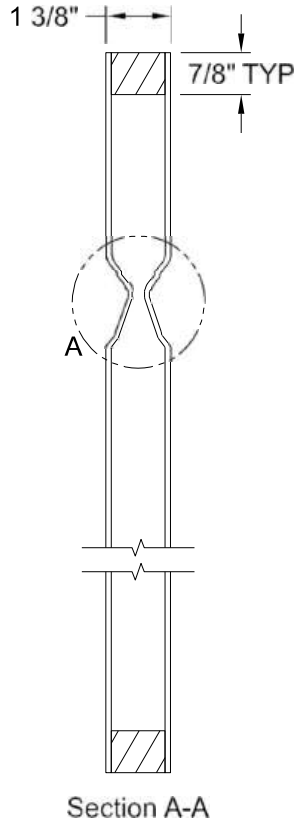

Section A-A

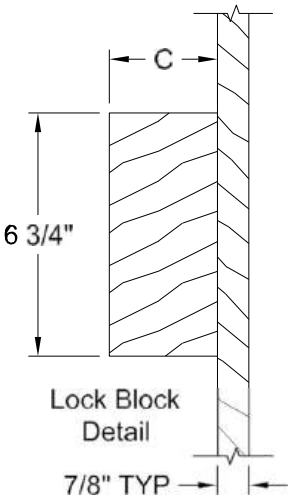

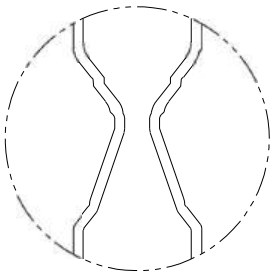

Detail A
INP Profile

Dimension Table			
Door Size	A	B	C
1'-8" x 7'-0"	20"	4"	3"
1'-6" x 7'-0"	18"	3"	1 5/8"

COLONIST BIFOLD PINE GRAIN 7'-0"

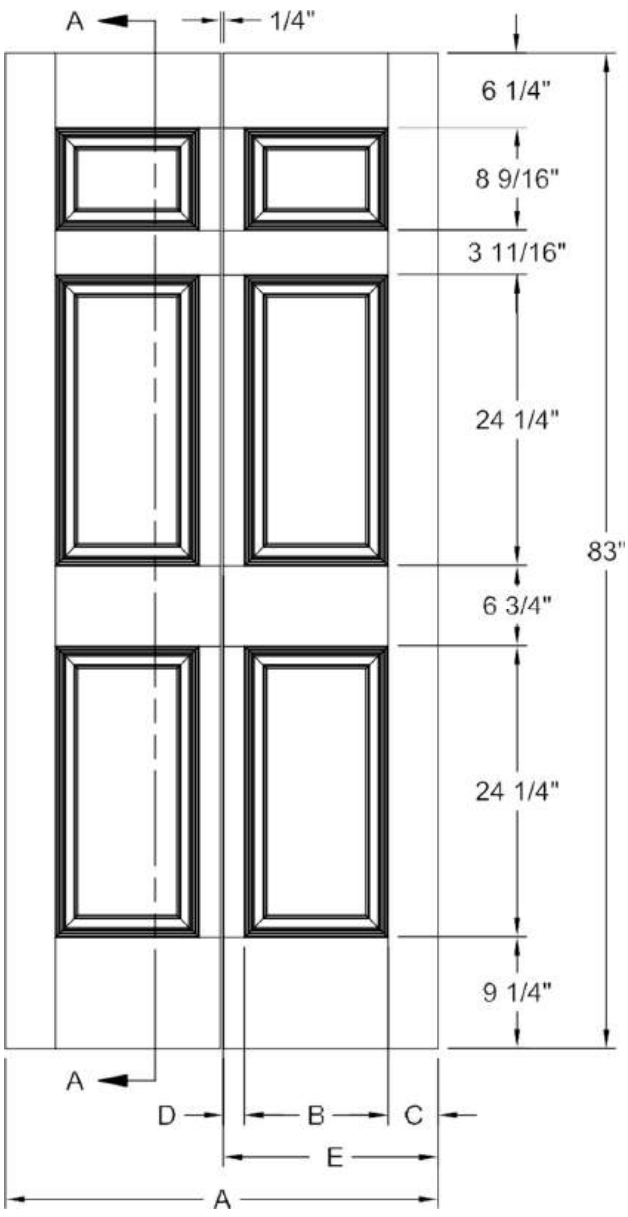

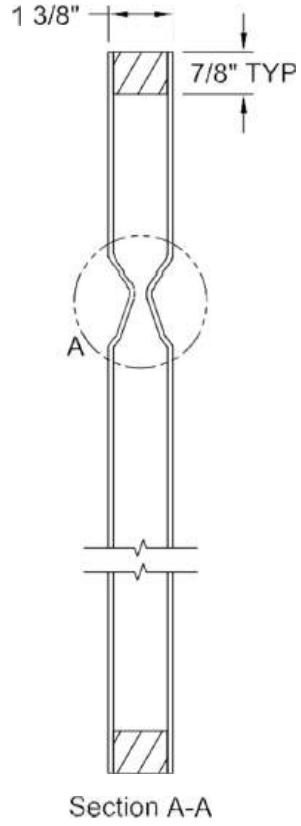

Section A-A

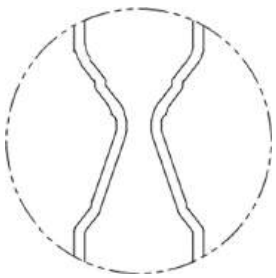

Detail A
INP Profile

Dimension Table					
Door Size	A	B	C	D	E
3'-0" x 7'-0"	36"	12"	4 1/8"	1 3/4"	17 7/8"
2'-10" x 7'-0"	34"	10"	5 1/8"	1 3/4"	16 7/8"
2'-8" x 7'-0"	32"	10"	4 1/8"	1 3/4"	15 7/8"
2'-6" x 7'-0"	30"	9"	4 1/8"	1 3/4"	14 7/8"
2'-4" x 7'-0"	28"	8"	4 1/8"	1 3/4"	13 7/8"
2'-2" x 7'-0"	26"	6"	5 1/8"	1 3/4"	11 7/8"
2'-0" x 7'-0"	24"	6"	4 1/8"	1 3/4"	10 7/8"
1'-10" x 7'-0"	22"	6"	3 1/8"	1 3/4"	10 7/8"

COLONIST PINE GRAIN 8'-0"

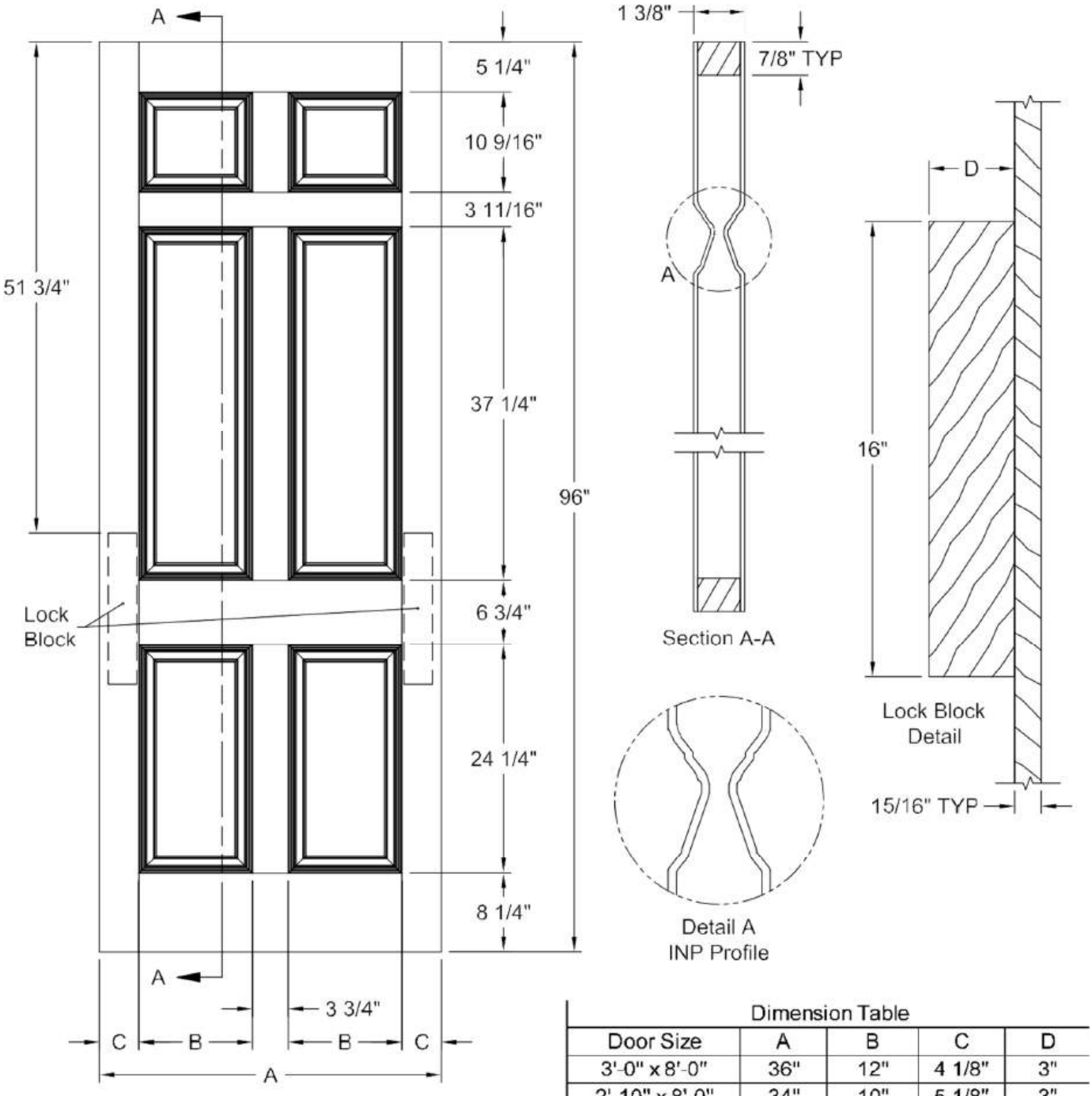

Dimension Table

Door Size	A	B	C	D
3'-0" x 8'-0"	36"	12"	4 1/8"	3"
2'-10" x 8'-0"	34"	10"	5 1/8"	3"
2'-8" x 8'-0"	32"	10"	4 1/8"	3"
2'-6" x 8'-0"	30"	9"	4 1/8"	3"
2'-4" x 8'-0"	28"	8"	4 1/8"	3"
2'-2" x 8'-0"	26"	6"	5 1/8"	3"
2'-0" x 8'-0"	24"	6"	4 1/8"	3"
1'-10" x 8'-0"	22"	6"	3 1/8"	2 1/8"

COLONIST PINE GRAIN 8'-0"

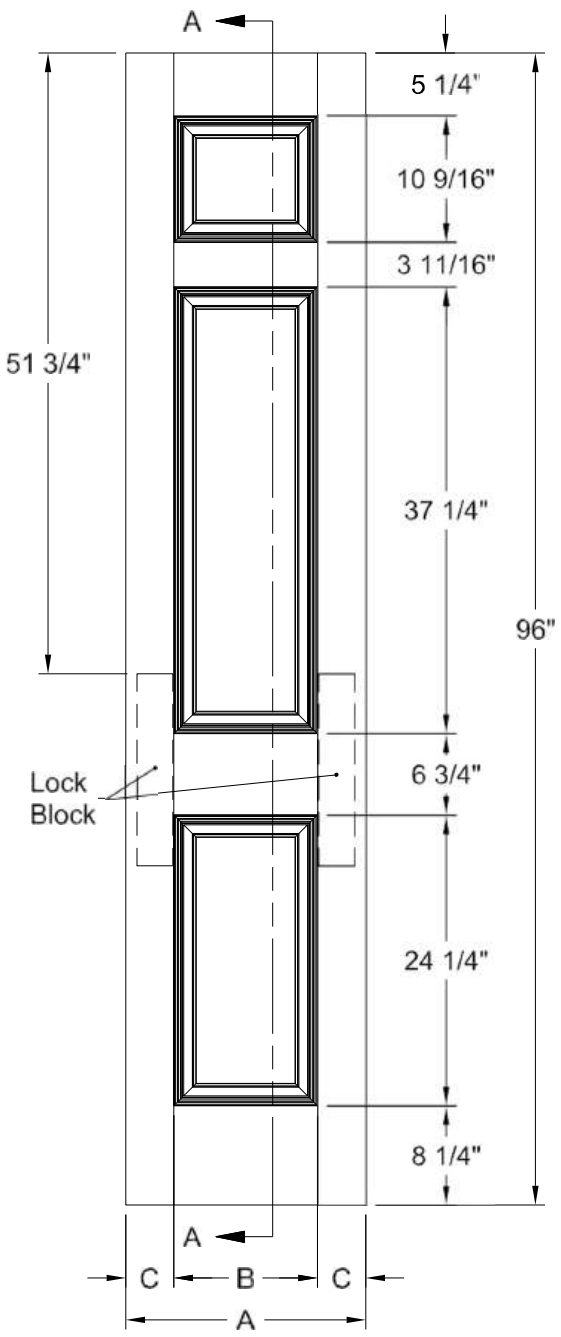

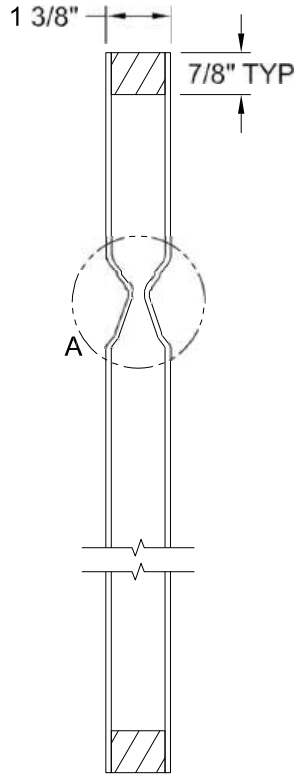

Section A-A

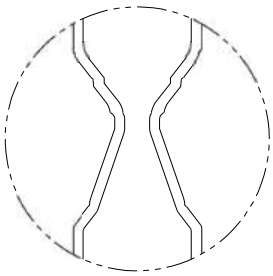

Detail A
INP Profile

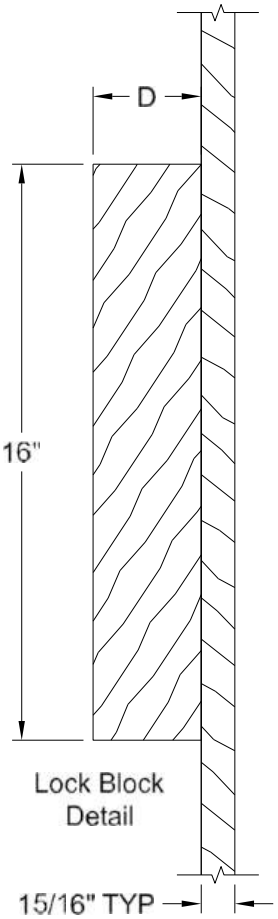

Lock Block
Detail

Dimension Table				
Door Size	A	B	C	D
1'-8" x 8'-0"	20"	12"	4"	3"
1'-6" x 8'-0"	18"	12"	3"	1 5/8"
1'-4" x 8'-0"	16"	7"	4 1/2"	3"
1'-3" x 6'-8"	15"	7"	4"	3"
1'-2" x 6'-8"	14"	7"	3 1/2"	2 1/8"
1'-0" x 6'-8"	12"	7"	2 1/2"	1 3/8"

COLONIST BIFOLD PINE GRAIN 8'-0"

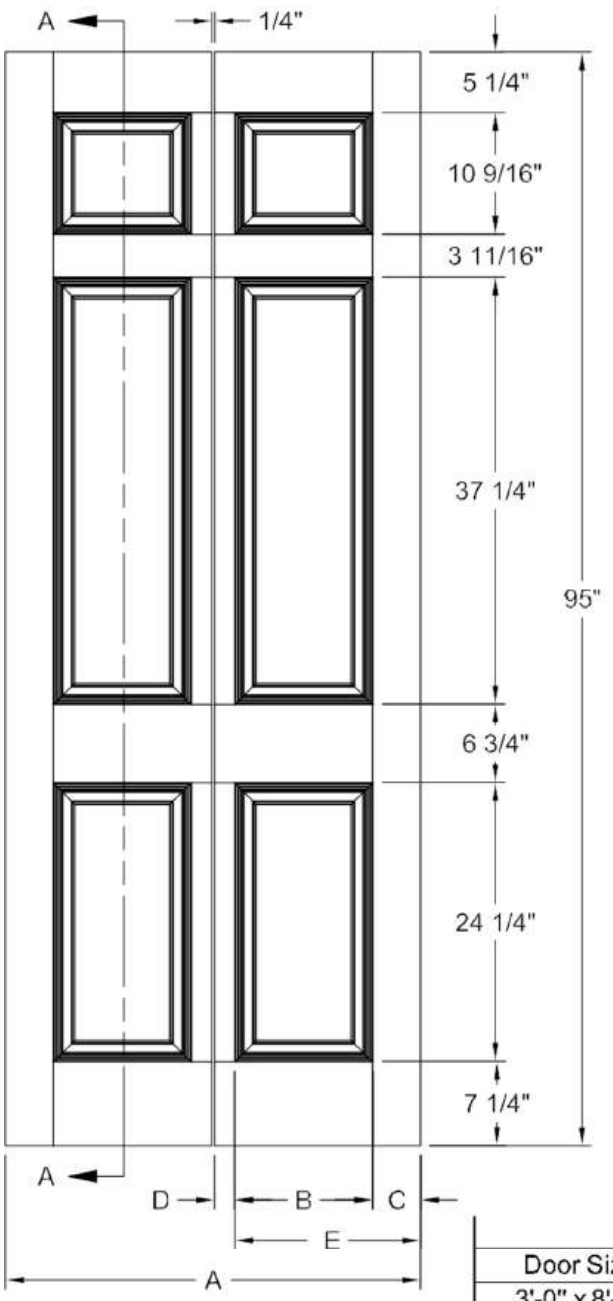

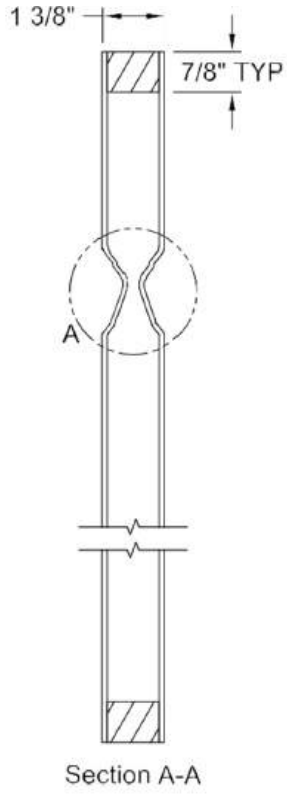

Section A-A

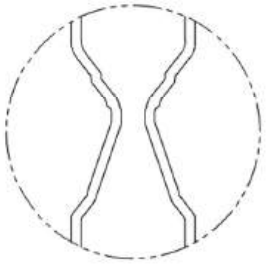

Detail A
INP Profile

Dimension Table

Door Size	A	B	C	D	E
3'-0" x 8'-0"	36"	10"	5 3/4"	2 3/8"	17 7/8"
2'-10" x 8'-0"	34"	10"	4 3/4"	2 3/8"	16 7/8"
2'-8" x 8'-0"	32"	10"	3 3/4"	2 3/8"	15 7/8"
2'-6" x 8'-0"	30"	10"	2 3/4"	2 3/8"	14 7/8"
2'-4" x 8'-0"	28"	10"	1 3/4"	1 3/8"	13 7/8"
2'-2" x 8'-0"	26"	6"	5 1/8"	1 3/4"	12 7/8"
2'-0" x 8'-0"	24"	6"	4 1/8"	1 3/4"	11 7/8"
1'-10" x 8'-0"	22"	6"	3 1/8"	1 3/4"	10 7/8"

COLONIST SMOOTH COMMERCIAL 6'-8"

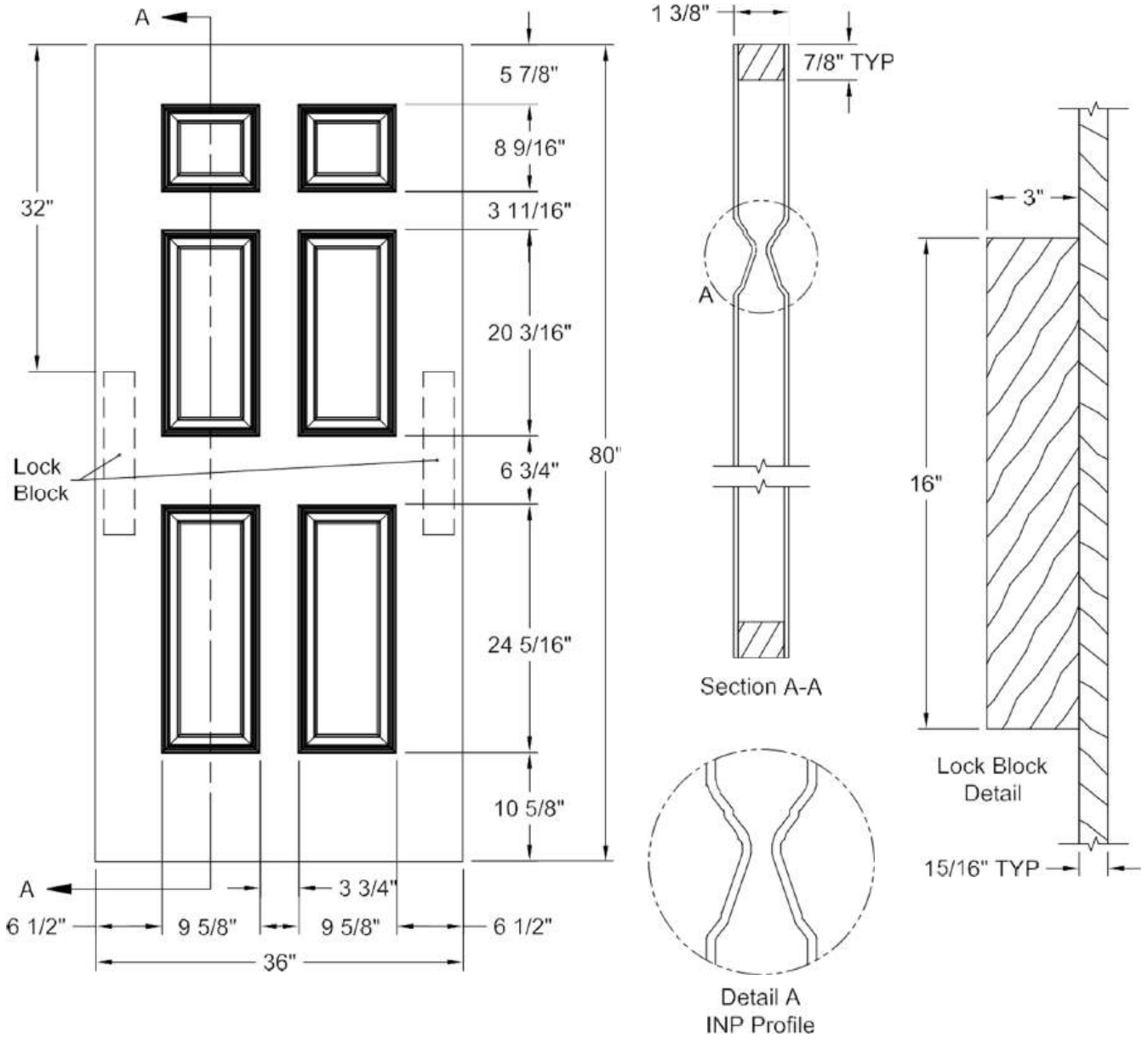

Dimension Table
Door Size
3'-0" x 6'-8"

COLONIST SMOOTH COMMERCIAL 7'-0"

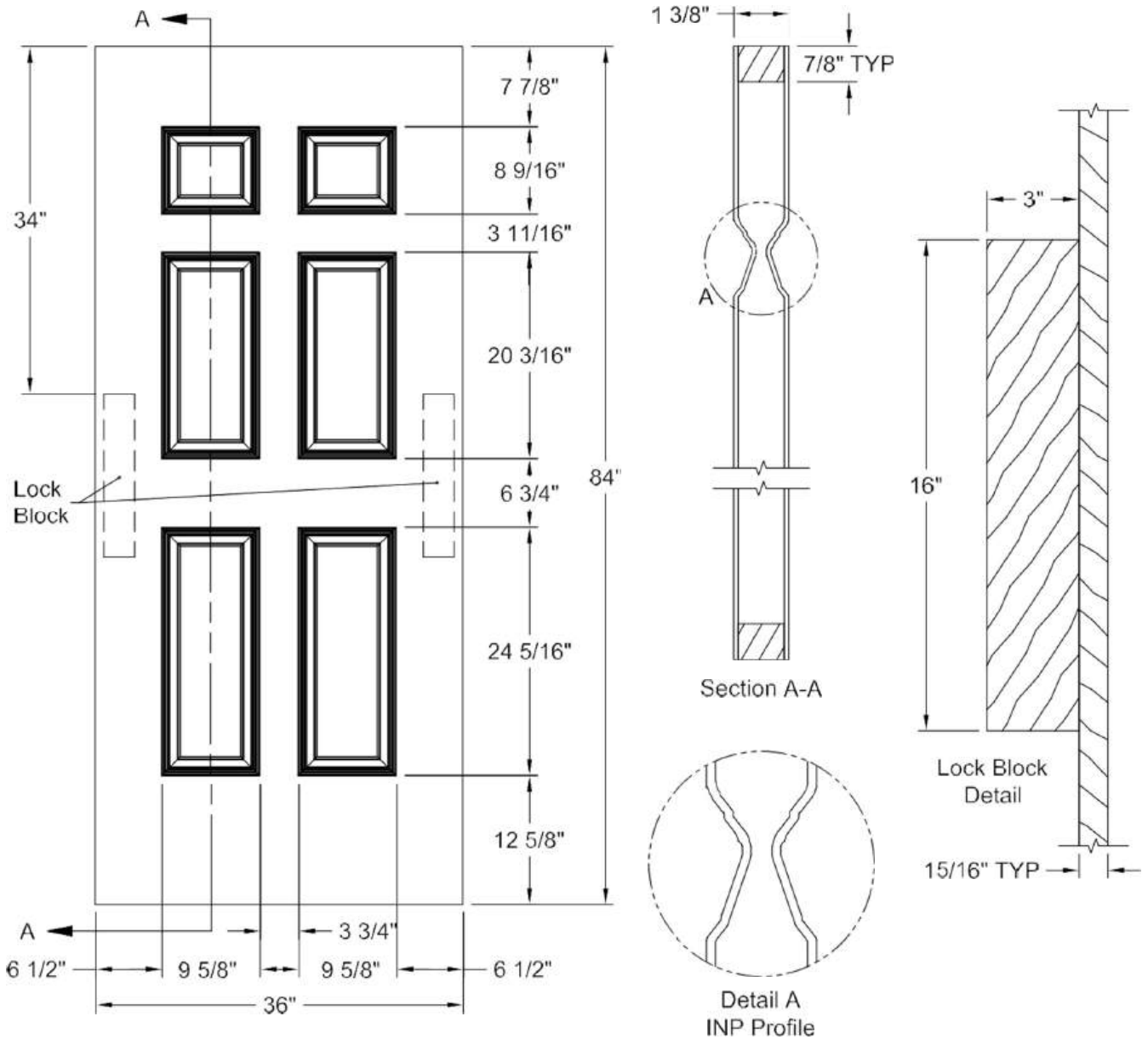

Dimension Table
Door Size
3'-0" x 7'-0"

CONMORE SMOOTH 6'-8"

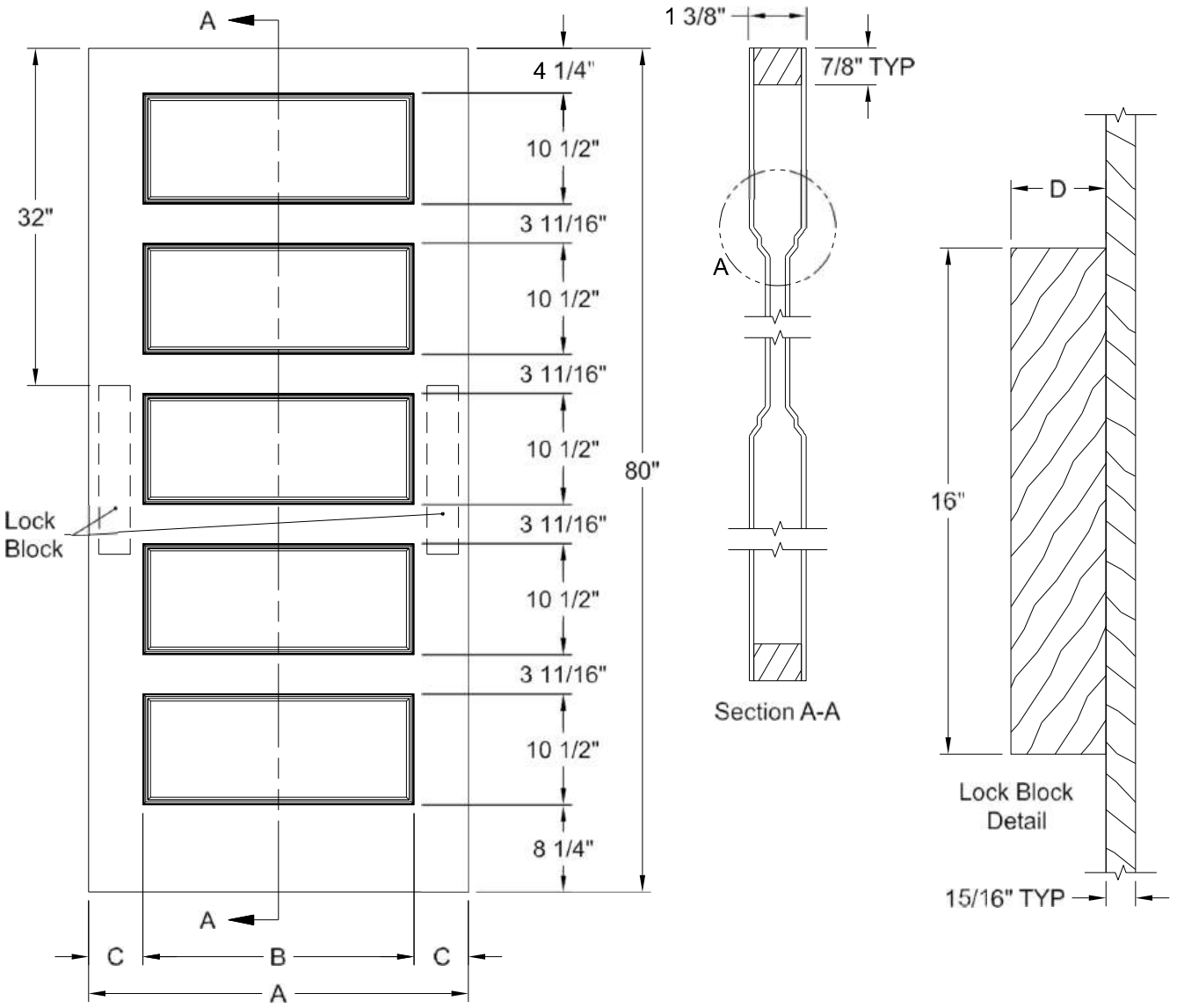

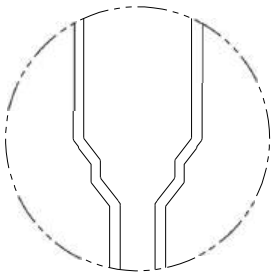

Detail A
Flat Panel
Profile

Dimension Table				
Door Size	A	B	C	D
3'-0" x 6'-8"	36"	25 5/8"	5 3/16"	3"
2'-10" x 6'-8"	34"	23 5/8"	5 3/16"	3"
2'-8" x 6'-8"	32"	23 5/8"	4 3/16"	3"
2'-6" x 6'-8"	30"	21 5/8"	4 3/16"	3"
2'-4" x 6'-8"	28"	19 5/8"	4 3/16"	3"
2'-2" x 6'-8"	26"	15 5/8"	5 3/16"	3"
2'-0" x 6'-8"	24"	15 5/8"	4 3/16"	3"
1'-10" x 6'-8"	22"	15 5/8"	3 3/16"	2 1/8"
1'-8" x 6'-8"	20"	9 5/8"	5 3/16"	3"
1'-6" x 6'-8"	18"	9 5/8"	4 3/16"	3"

CONMORE BIFOLD SMOOTH 6'-8"

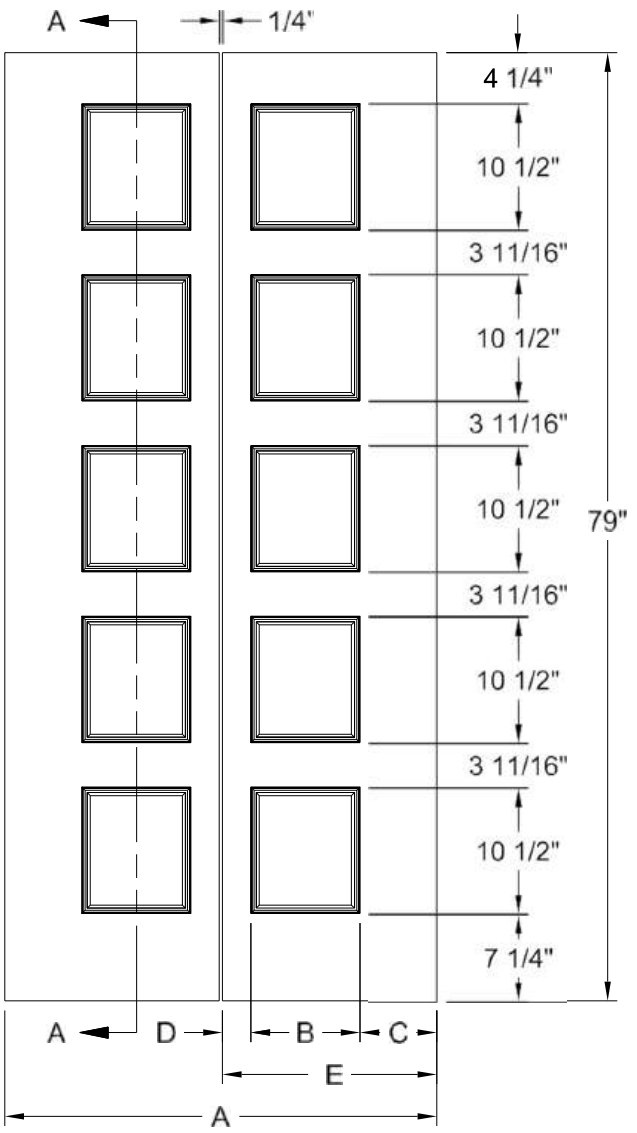

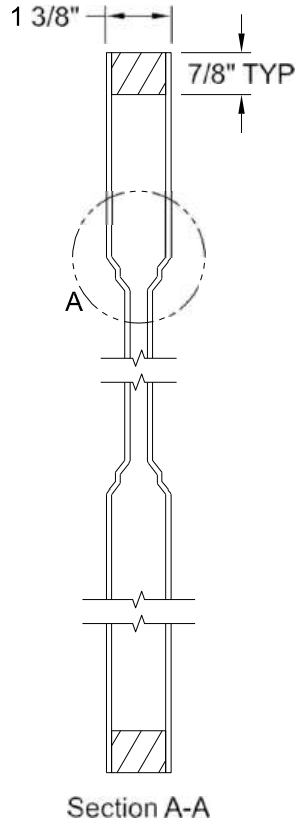

Section A-A

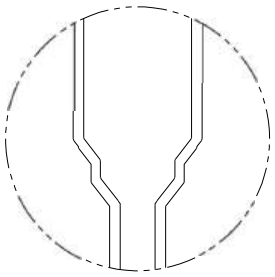

Detail A
Flat Panel
Profile

Dimension Table

Door Size	A	B	C	D	E
3'-0" x 6'-8"	36"	9 1/16"	6 7/16"	2 3/8"	17 7/8"
2'-10" x 6'-8"	34"	9 1/16"	5 7/16"	2 3/8"	16 7/8"
2'-8" x 6'-8"	32"	9 1/16"	4 7/16"	2 3/8"	15 7/8"
2'-6" x 6'-8"	30"	9 1/16"	3 7/16"	2 3/8"	14 7/8"
2'-4" x 6'-8"	28"	9 1/16"	2 7/16"	2 3/8"	13 7/8"
2'-0" x 6'-8"	24"	6 3/4"	3 3/8"	1 3/4"	11 7/8"
1'-10" x 6'-8"	22"	6 3/4"	2 3/8"	1 3/4"	10 7/8"

CONMORE SMOOTH 7'-0"

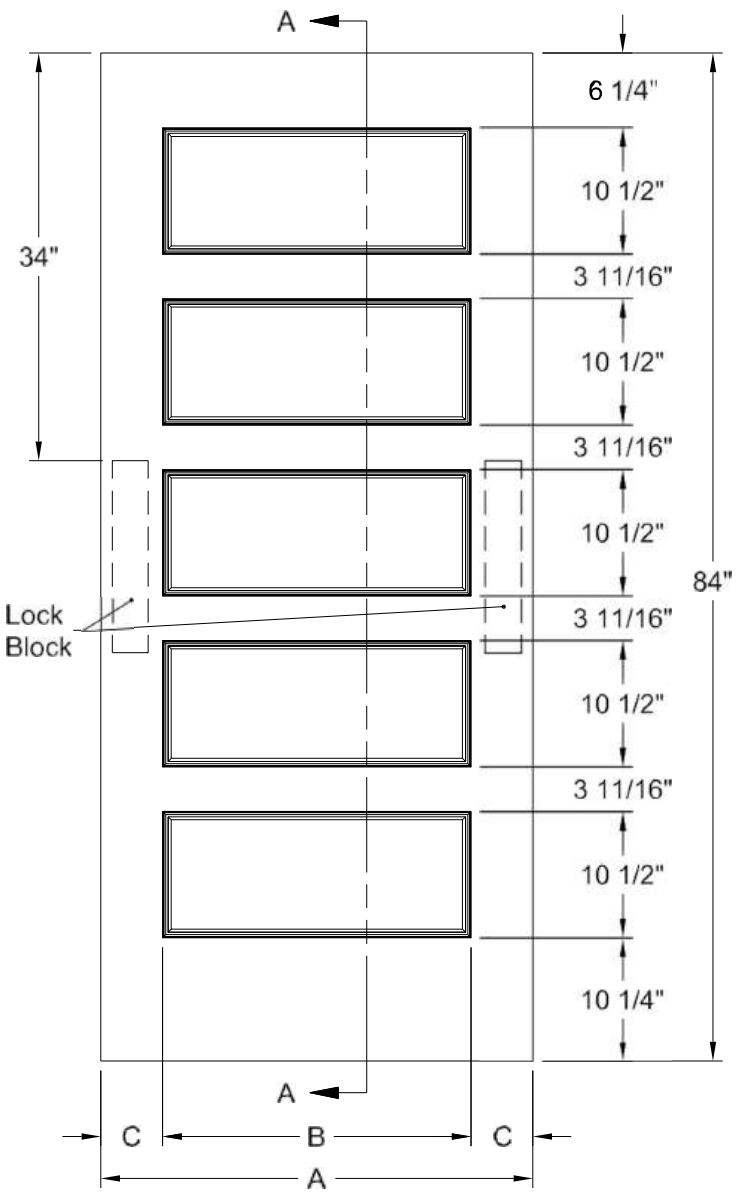

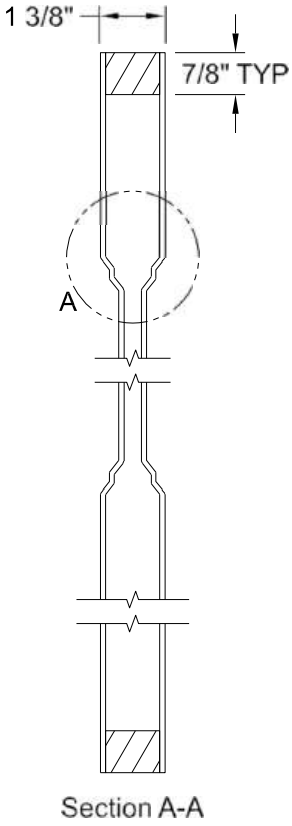

Section A-A

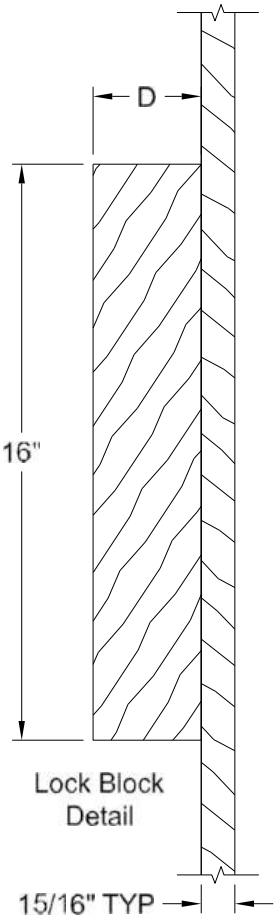

Lock Block Detail

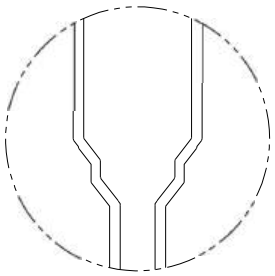
Detail A
Flat Panel
Profile

Dimension Table				
Door Size	A	B	C	D
3'-0" x 7'-0"	36"	25 5/8"	5 3/16"	3"
2'-10" x 7'-0"	34"	23 5/8"	5 3/16"	3"
2'-8" x 7'-0"	32"	23 5/8"	4 3/16"	3"
2'-6" x 7'-0"	30"	21 5/8"	4 3/16"	3"
2'-4" x 7'-0"	28"	19 5/8"	4 3/16"	3"
2'-2" x 7'-0"	26"	15 5/8"	5 3/16"	3"
2'-0" x 7'-0"	24"	15 5/8"	4 3/16"	3"
1'-10" x 7'-0"	22"	15 5/8"	3 3/16"	2 1/8"
1'-8" x 7'-0"	20"	9 5/8"	5 3/16"	3"
1'-6" x 7'-0"	18"	9 5/8"	4 3/16"	3"

CONMORE BIFOLD SMOOTH 7'-0"

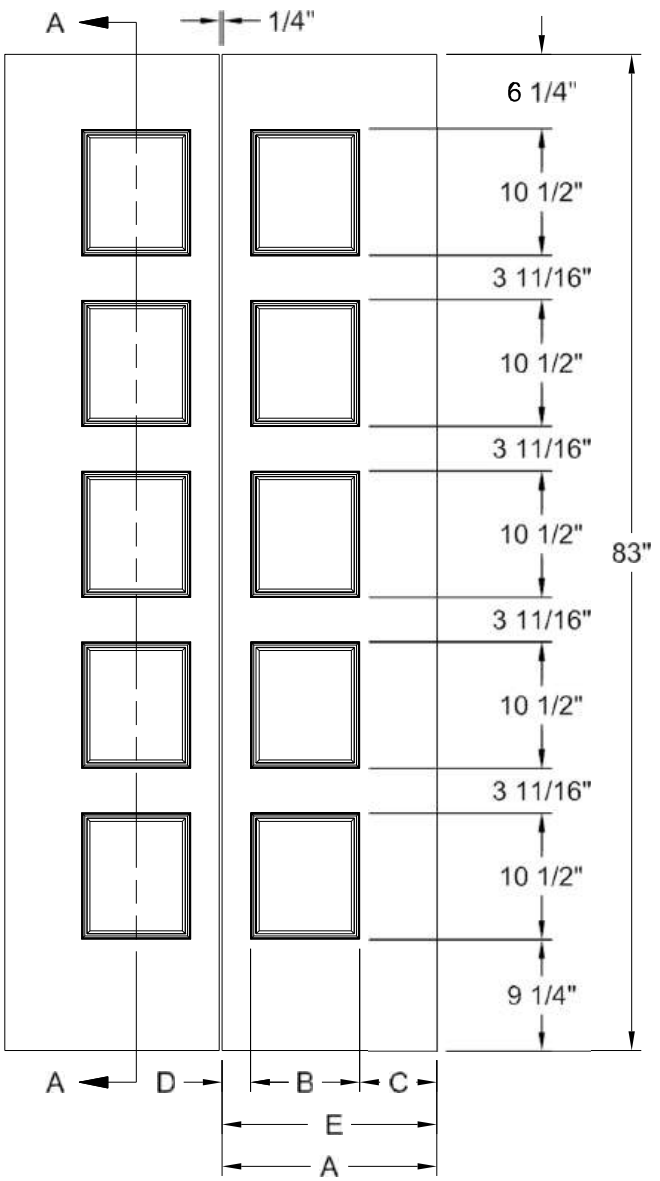

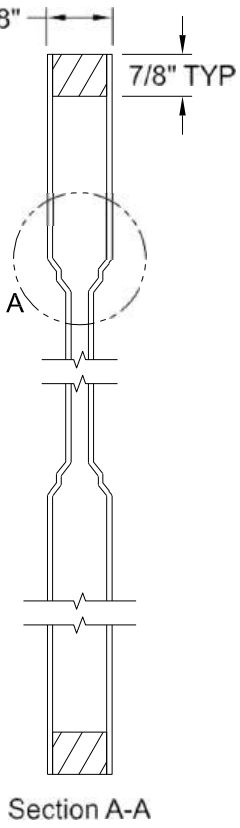

Section A-A

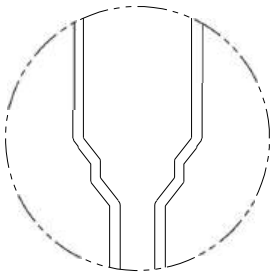

Detail A
Flat Panel
Profile

Dimension Table

Door Size	A	B	C	D	E
3'-0" x 7'-0"	18"	9 1/16"	6 7/16"	2 3/8"	17 7/8"
2'-10" x 7'-0"	17"	9 1/16"	5 7/16"	2 3/8"	16 7/8"
2'-8" x 7'-0"	16"	9 1/16"	4 7/16"	2 3/8"	15 7/8"
2'-6" x 7'-0"	15"	9 1/16"	3 7/16"	2 3/8"	14 7/8"
2'-4" x 7'-0"	14"	9 1/16"	2 7/16"	2 3/8"	13 7/8"
2'-0" x 7'-0"	12"	6 3/4"	3 3/8"	1 3/4"	11 7/8"
1'-10" x 7'-0"	11"	6 3/4"	2 3/8"	1 3/4"	10 7/8"

CONMORE SMOOTH 8'-0"

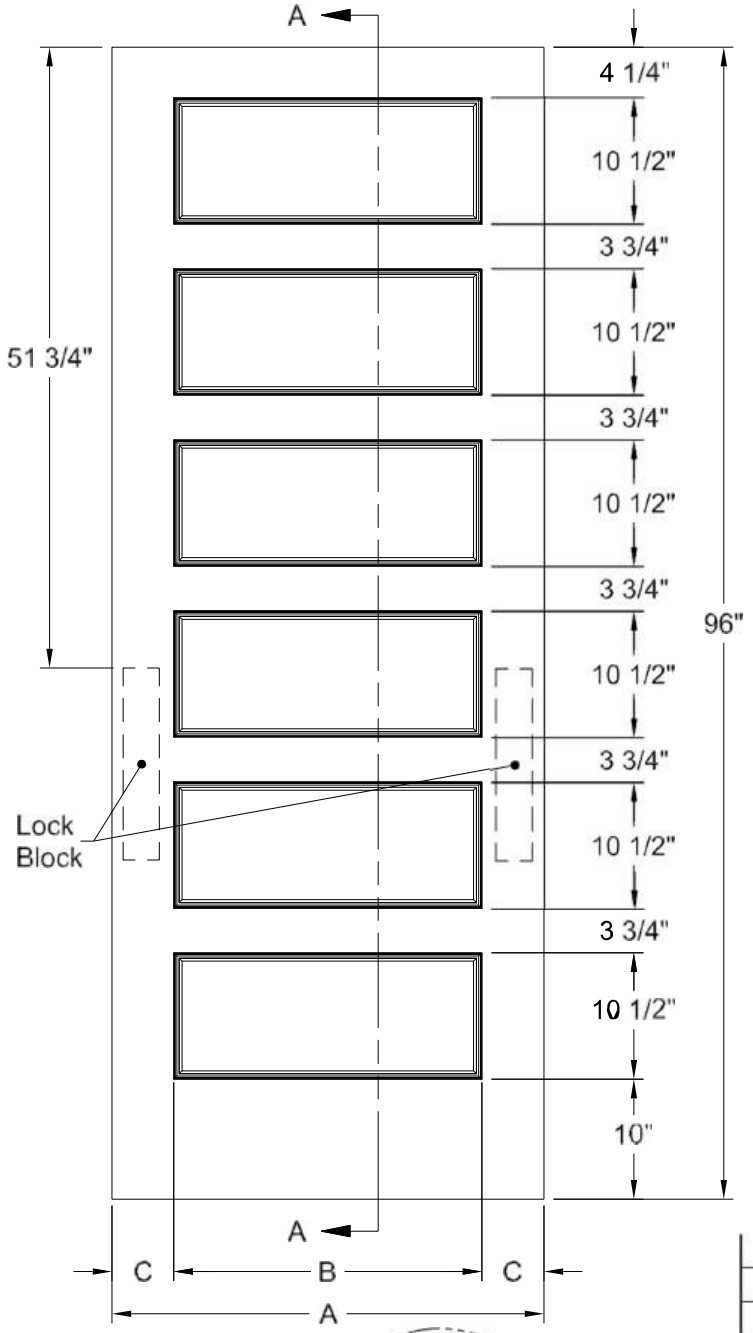

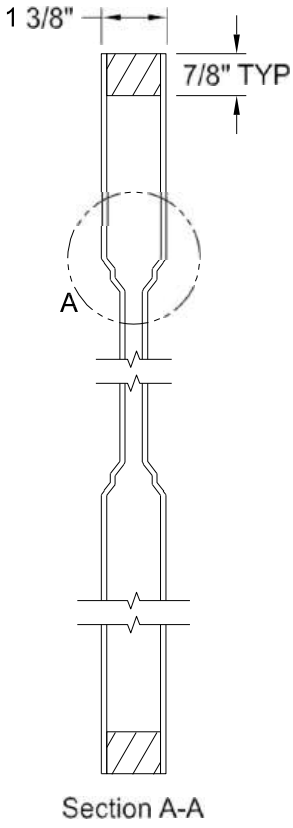

Section A-A

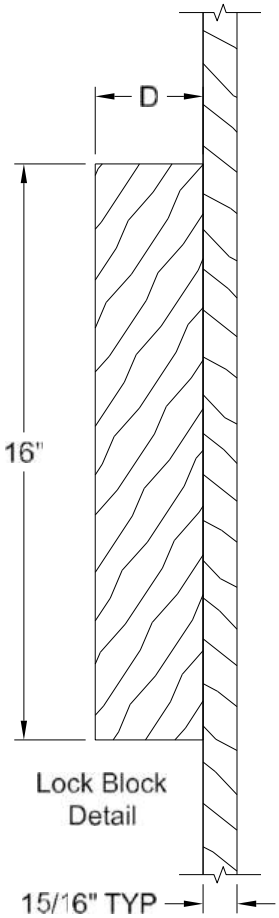

Lock Block
Detail

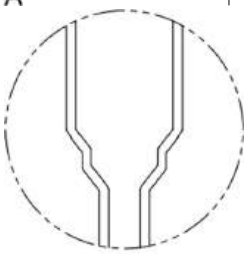

Detail A
Stepped Profile

Dimension Table				
Door Size	A	B	C	D
3'-0" x 8'-0"	36"	25 5/8"	5 3/16"	3"
2'-10" x 8'-0"	34"	23 5/8"	5 3/16"	3"
2'-8" x 8'-0"	32"	23 5/8"	4 3/16"	3"
2'-6" x 8'-0"	30"	21 5/8"	4 3/16"	3"
2'-4" x 8'-0"	28"	19 5/8"	4 3/16"	3"
2'-2" x 8'-0"	26"	15 5/8"	5 3/16"	3"
2'-0" x 8'-0"	24"	15 5/8"	4 3/16"	3"
1'-10" x 8'-0"	22"	15 5/8"	3 3/16"	2 1/8"
1'-8" x 8'-0"	20"	9 5/8"	5 3/16"	3"
1'-6" x 8'-0"	18"	9 5/8"	4 3/16"	3"

CONMORE BIFOLD SMOOTH 8'-0"

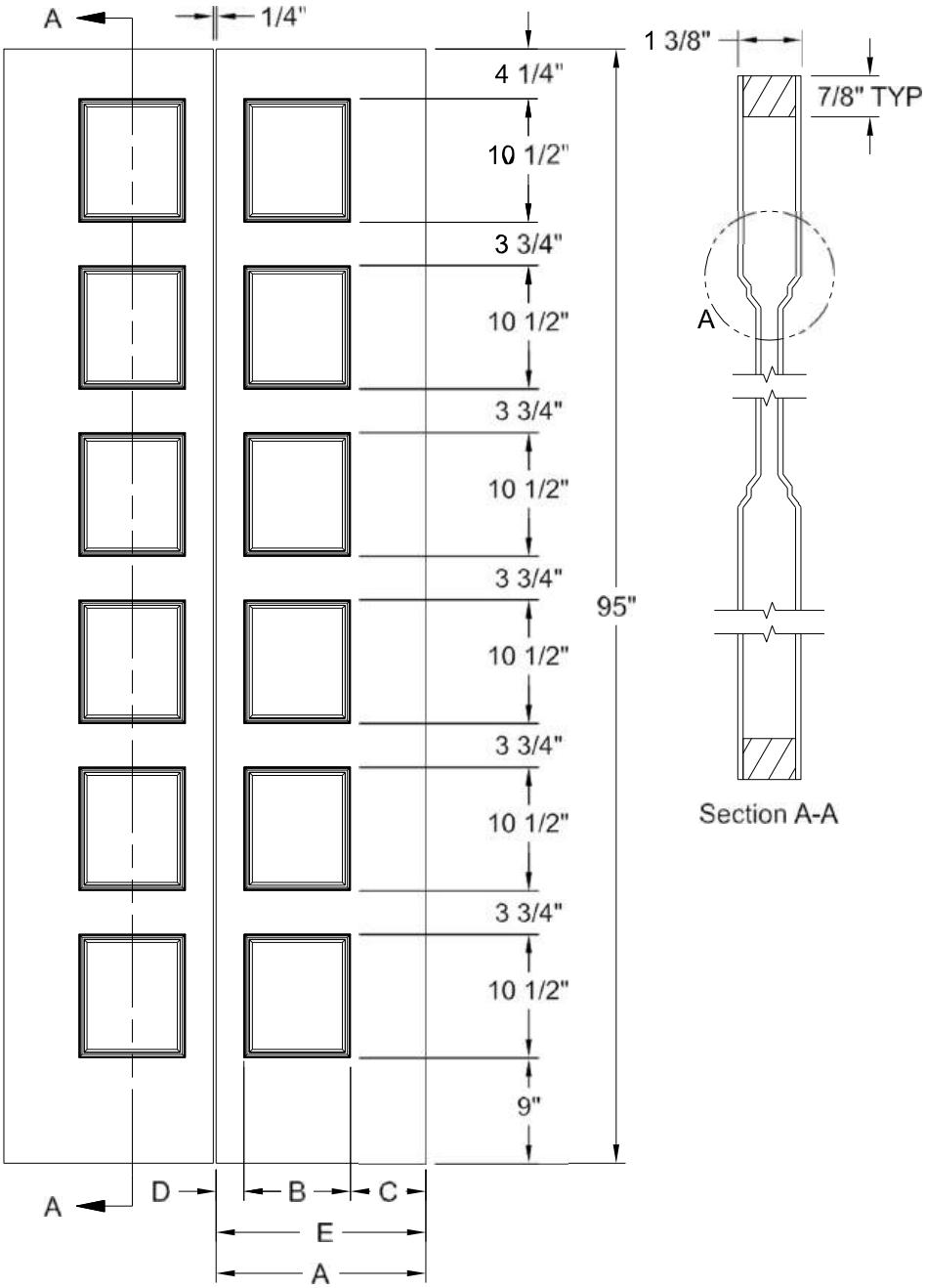

Section A-A

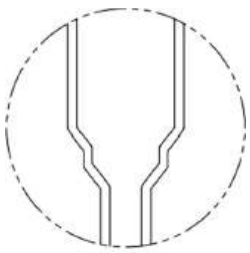

Detail A
Stepped Profile

Dimension Table

Door Size	A	B	C	D	E
3'-0" x 8'-0"	18"	9 1/16"	6 7/16"	2 3/8"	17 7/8"
2'-10" x 8'-0"	17"	9 1/16"	5 7/16"	2 3/8"	16 7/8"
2'-8" x 8'-0"	16"	9 1/16"	4 7/16"	2 3/8"	15 7/8"
2'-6" x 8'-0"	15"	9 1/16"	3 7/16"	2 3/8"	14 7/8"
2'-4" x 8'-0"	14"	9 1/16"	2 7/16"	2 3/8"	13 7/8"
2'-0" x 8'-0"	12"	6 3/4"	3 3/8"	1 3/4"	11 7/8"
1'-10" x 8'-0"	11"	6 3/4"	2 3/8"	1 3/4"	10 7/8"

CONTINENTAL SMOOTH 6'-8"

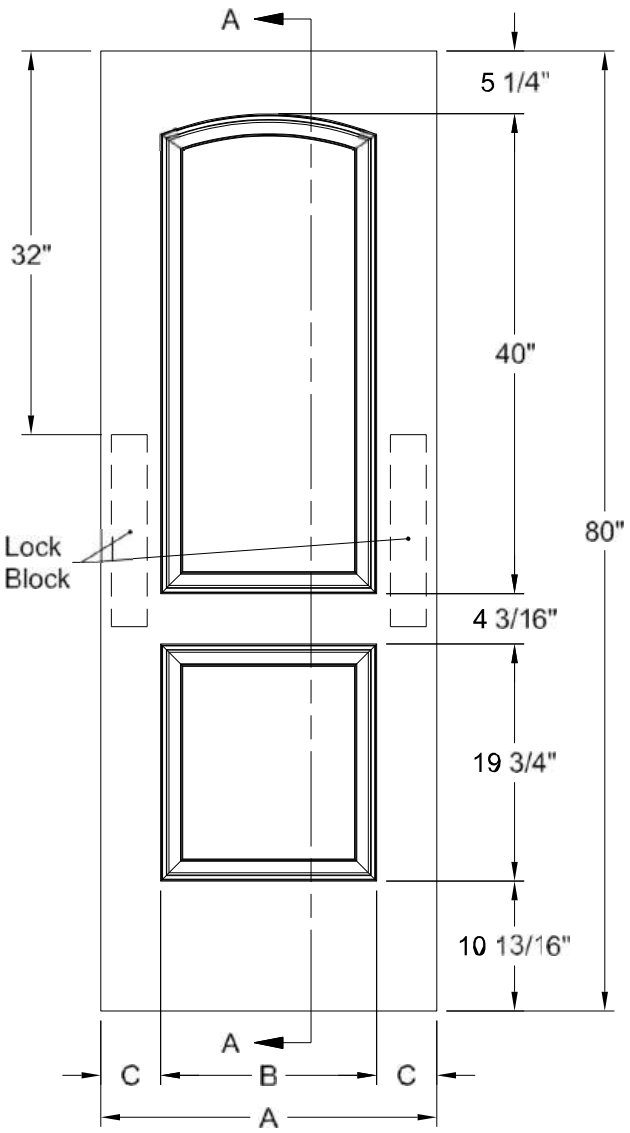

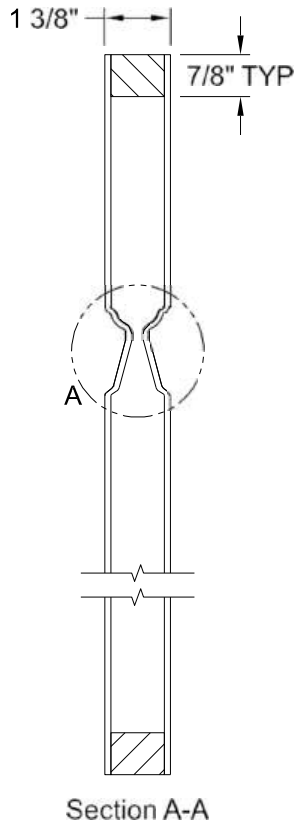

Section A-A

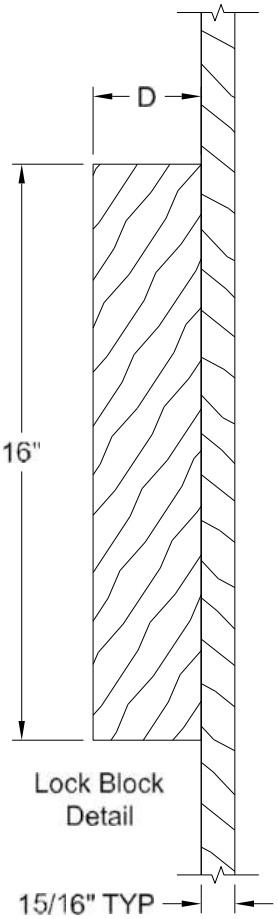

Lock Block
Detail

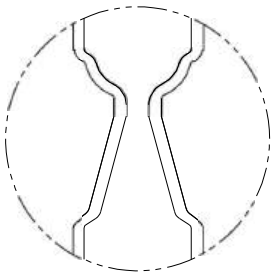

Detail A
Ovolo Sticking

Dimension Table				
Door Size	A	B	C	D
3'-0" x 6'-8"	36"	24"	6"	3"
2'-10" x 6'-8"	34"	24"	4"	3"
2'-8" x 6'-8"	32"	21"	4 1/2"	3"
2'-6" x 6'-8"	30"	20"	5"	3"
2'-4" x 6'-8"	28"	18"	5"	3"
2'-2" x 6'-8"	26"	18"	4"	3"
2'-0" x 6'-8"	24"	14"	5"	3"
1'-10" x 6'-8"	22"	14"	4"	3"
1'-8" x 6'-8"	20"	10 9/16"	4 23/32"	3"
1'-6" x 6'-8"	18"	10 9/16"	3 23/32"	2 11/16"
1'-4" x 6'-8"	16"	8 9/16"	3 23/32	2 11/16"
1'-3" x 6'-8"	15"	8 9/16"	3 7/32"	2 1/8"
1'-2" x 6'-8"	14"	8 9/16"	2 23/32"	1 5/8"
1'-0" x 6'-8"	12"	5 9/16"	3 7/32"	2 1/8"

CONTINENTAL BIFOLD SMOOTH 6'-8"

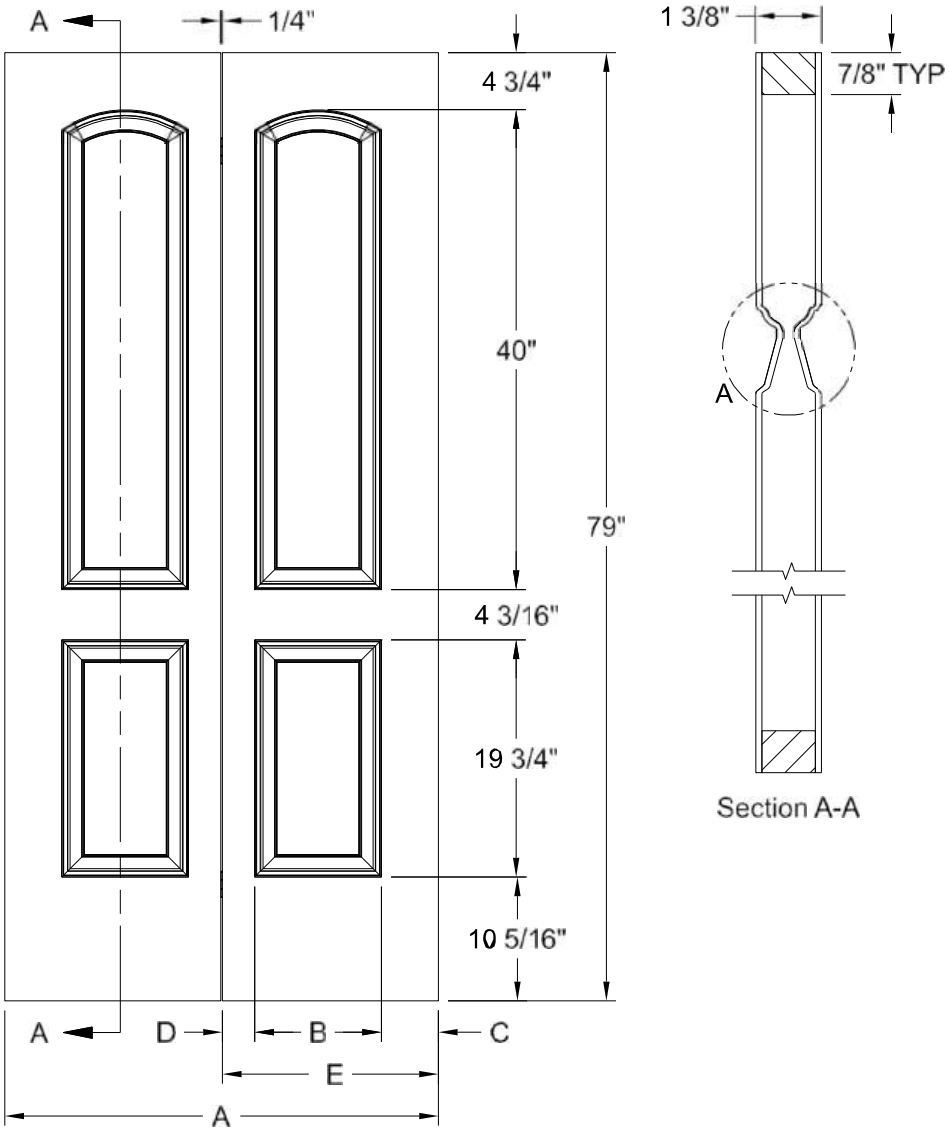

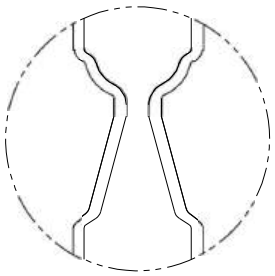

Detail A
Ovolo Sticking

Dimension Table

Door Size	A	B	C	D	E
3'-0" x 6'-8"	36"	10 9/16"	3 3/4"	2 11/16"	17 7/8"
2'-8" x 6'-8"	32"	8 9/16"	5 1/4"	2 3/16"	15 7/8"
2'-6" x 6'-8"	30"	8 9/16"	4 1/4"	2 3/16"	14 7/8"
2'-4" x 6'-8"	28"	8 9/16"	3 1/4"	2 3/16"	13 7/8"
2'-0" x 6'-8"	24"	5 9/16"	4 1/4"	2 3/16"	11 7/8"

CONTINENTAL SMOOTH 7'-0"

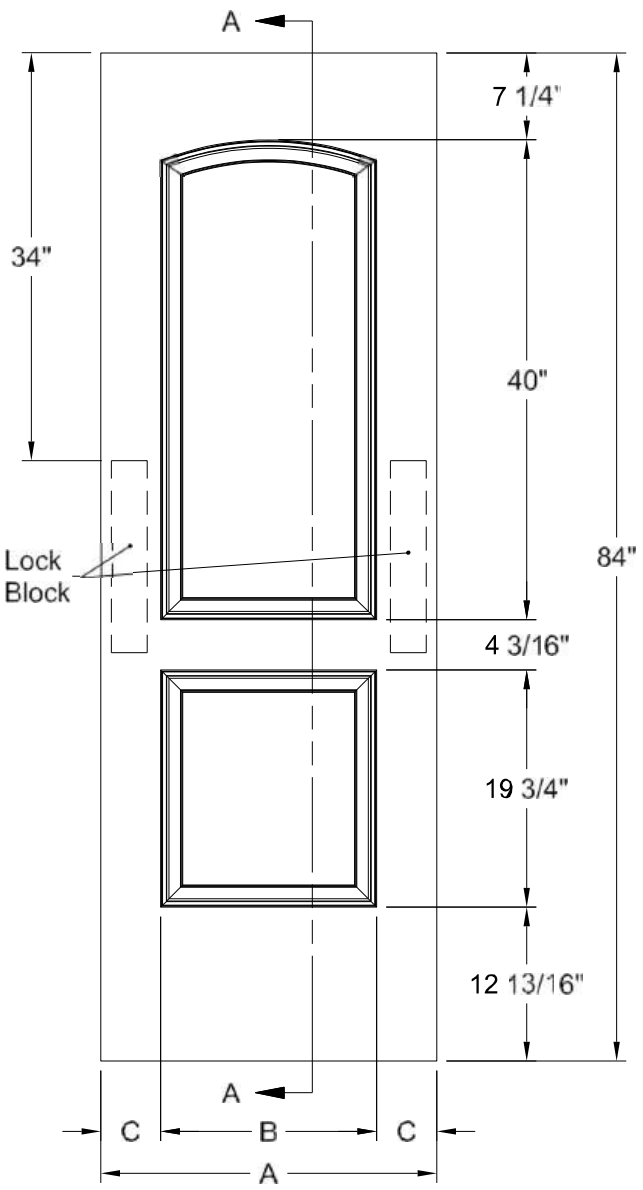

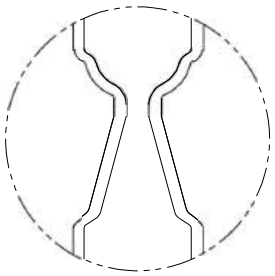

Detail A
Ovolo Sticking

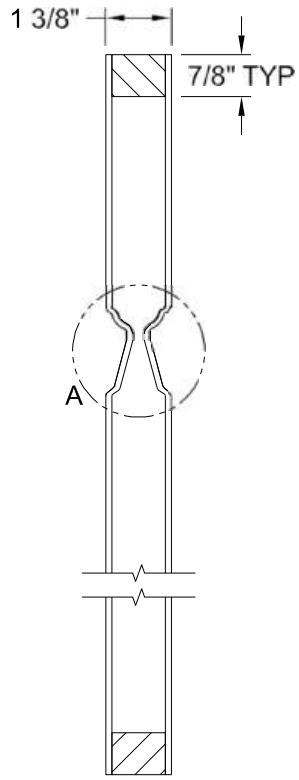

Section A-A

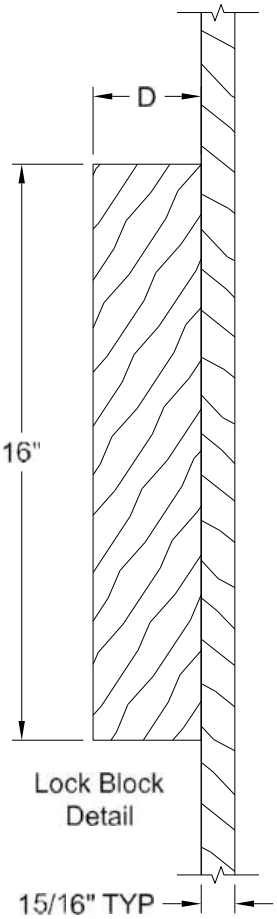

Lock Block
Detail

Dimension Table				
Door Size	A	B	C	D
3'-0" x 7'-0"	36"	24"	6"	3"
2'-10" x 7'-0"	34"	24"	5"	3"
2'-8" x 7'-0"	32"	21"	5 1/2"	3"
2'-6" x 7'-0"	30"	20"	5"	3"
2'-4" x 7'-0"	28"	18"	5"	3"
2'-2" x 7'-0"	26"	18"	4"	3"
2'-0" x 7'-0"	24"	14"	5"	3"
1'-10" x 7'-0"	22"	14"	4"	3"
1'-8" x 7'-0"	20"	10 9/16"	4 23/32"	3"
1'-6" x 7'-0"	18"	10 9/16"	3 23/32"	2 11/16"
1'-4" x 7'-0"	16"	8 9/16"	3 23/32"	2 11/16"
1'-3" x 7'-0"	15"	8 9/16"	3 7/32"	2 1/8"
1'-2" x 7'-0"	14"	8 9/16"	2 23/32"	1 5/8"
1'-0" x 7'-0"	12"	5 9/16"	3 7/32"	2 1/8"

CONTINENTAL BIFOLD SMOOTH 7'-0"

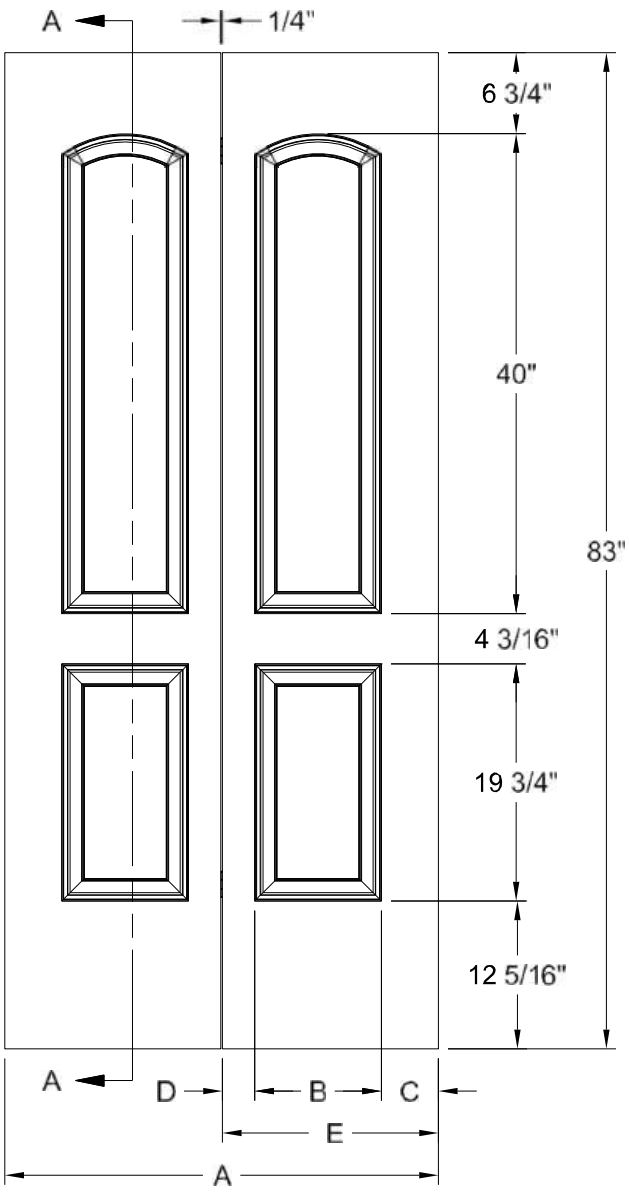

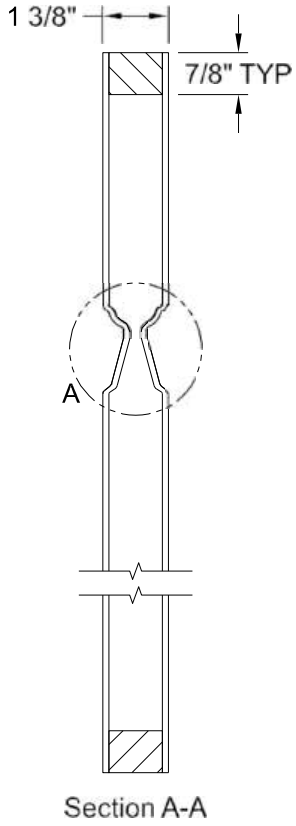

Section A-A

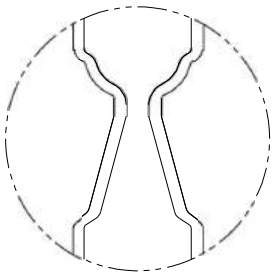

Detail A
Ovolo Sticking

Dimension Table

Door Size	A	B	C	D	E
3'-0" x 7'-0"	36"	10 9/16"	4 3/4"	2 11/16"	17 7/8"
2'-8" x 7'-0"	32"	8 9/16"	5 1/4"	2 3/16"	15 7/8"
2'-6" x 7'-0"	30"	8 9/16"	4 1/4"	2 3/16"	14 7/8"
2'-4" x 7'-0"	28"	8 9/16"	3 1/4"	2 3/16"	13 7/8"
2'-0" x 7'-0"	24"	5 9/16"	4 1/4"	2 3/16"	11 7/8"

CONTINENTAL SMOOTH 8'-0"

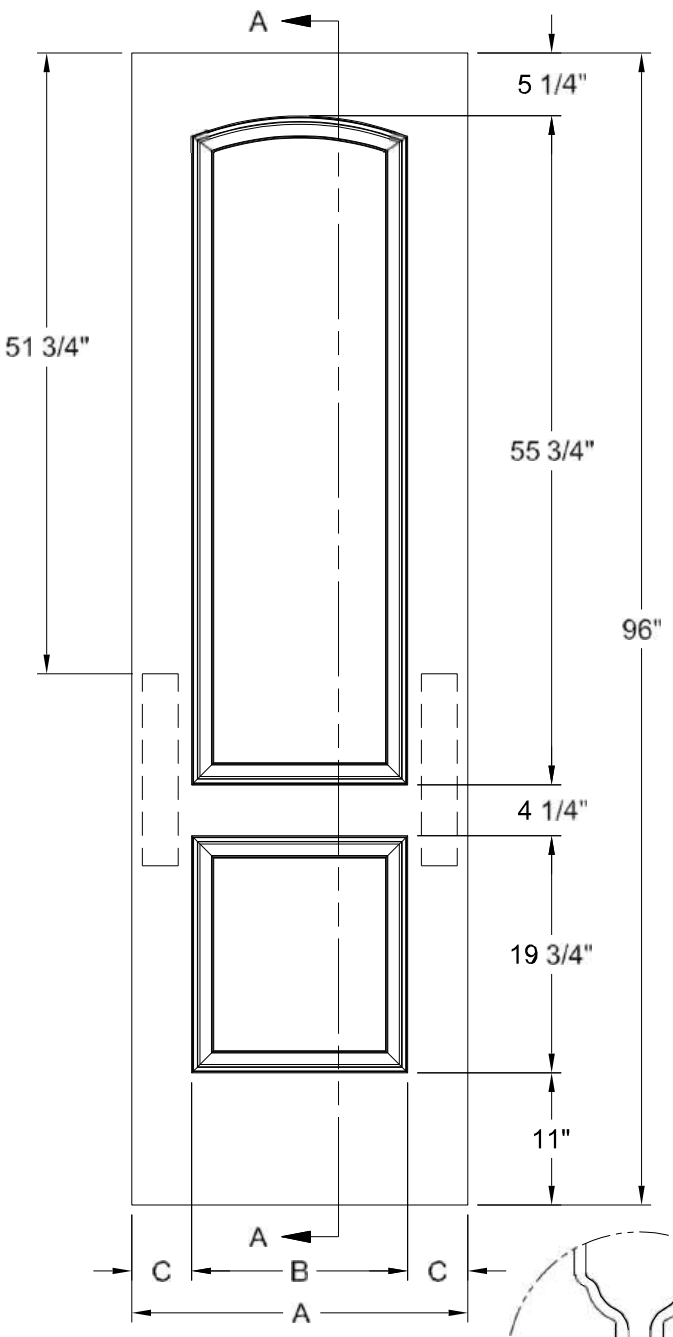

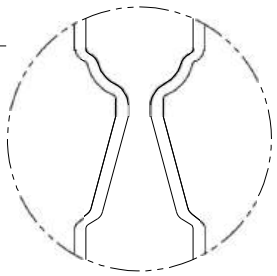

Detail A
Ovolo Sticking

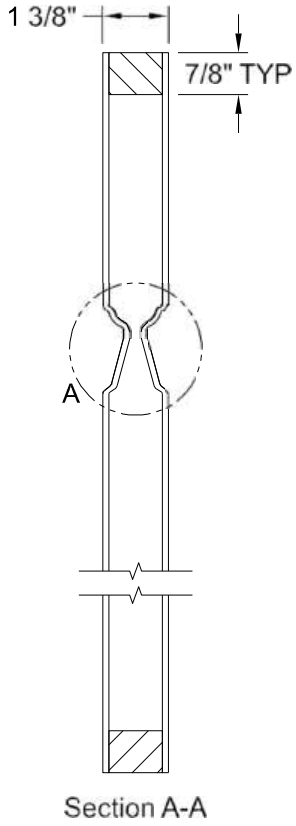

Section A-A

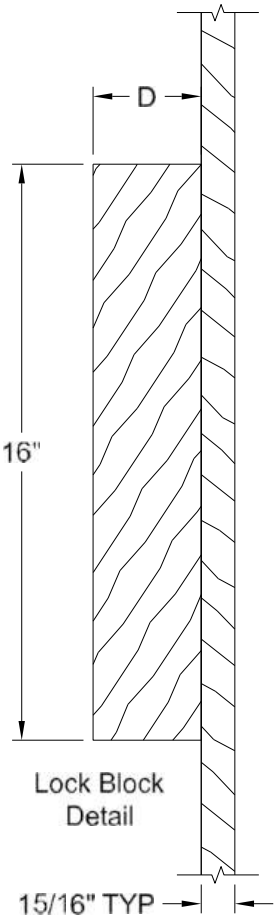

Lock Block
Detail

Dimension Table

Door Size	A	B	C	D
3'-0" x 8'-0"	36"	24"	6"	3"
2'-10" x 8'-0"	34"	24"	5"	3"
2'-8" x 8'-0"	32"	24"	5"	3"
2'-6" x 8'-0"	30"	20"	5"	3"
2'-4" x 8'-0"	28"	18"	5"	3"
2'-2" x 8'-0"	26"	14"	6"	3"
2'-0" x 8'-0"	24"	14"	5"	3"
1'-10" x 8'-0"	22"	14"	4"	3"
1'-8" x 8'-0"	20"	9 3/4"	5 1/8"	3"
1'-6" x 8'-0"	18"	9 3/4"	4 1/8"	3"
1'-4" x 8'-0"	16"	7"	4 1/2"	3"
1'-3" x 8'-0"	15"	7"	4"	3"
1'-2" x 8'-0"	14"	7"	3 1/2"	2 1/8"
1'-0" x 8'-0"	12"	7"	2 1/2"	1 3/8"

CONTINENTAL BIFOLD SMOOTH 8'-0"

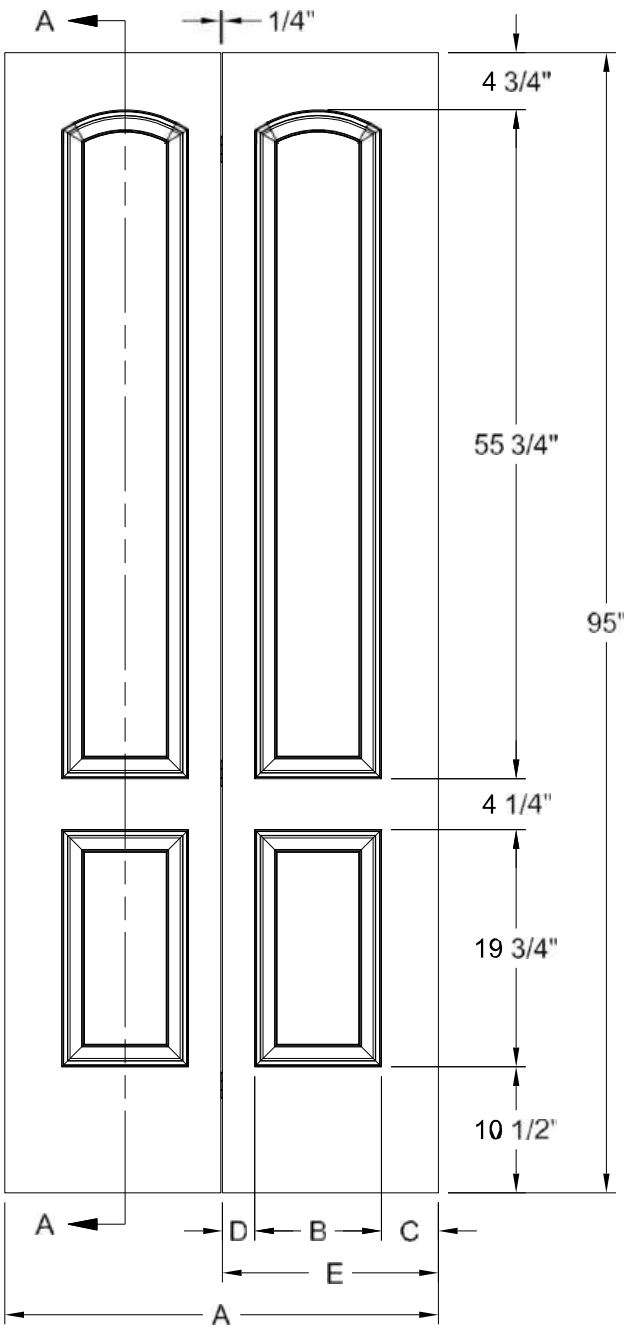

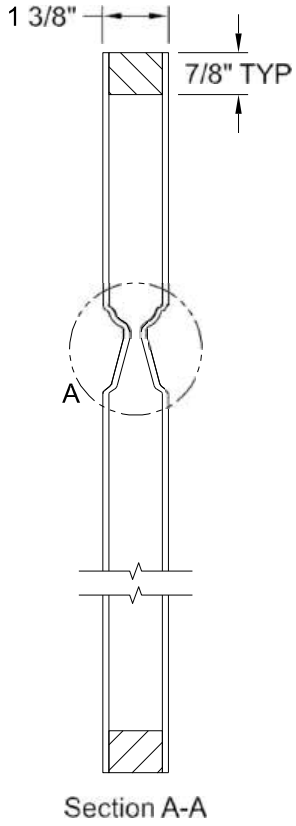

Section A-A

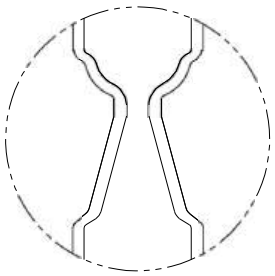

Detail A
Ovolo Sticking

Dimension Table					
Door Size	A	B	C	D	E
3'-0" x 8'-0"	36"	10 9/16"	4 3/4"	2 11/16"	17 7/8"
2'-8" x 8'-0"	32"	8 9/16"	5 1/4"	2 3/16"	15 7/8"
2'-6" x 8'-0"	30"	8 9/16"	4 1/4"	2 3/16"	14 7/8"
2'-4" x 8'-0"	28"	8 9/16"	3 1/4"	2 3/16"	13 7/8"
2'-0" x 8'-0"	24"	5 9/16"	4 1/4"	2 3/16"	11 7/8"

CONTINENTAL COMMERCIAL SMOOTH 6'-8"

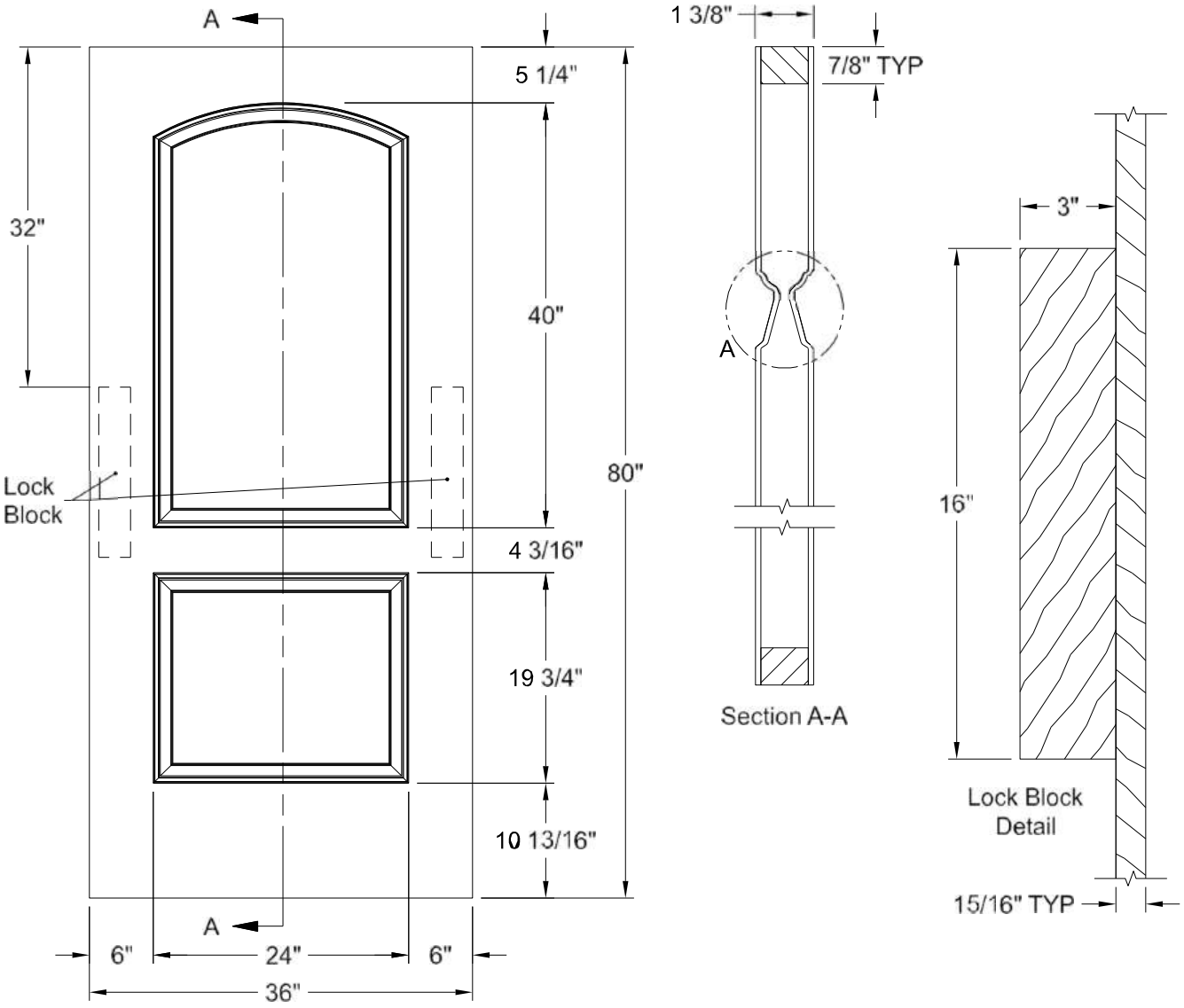

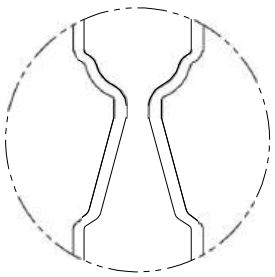

Detail A
Ovolo Sticking

Dimension Table
Door Size
3'-0" x 6'-8"

CONTINENTAL COMMERCIAL SMOOTH 7'-0"

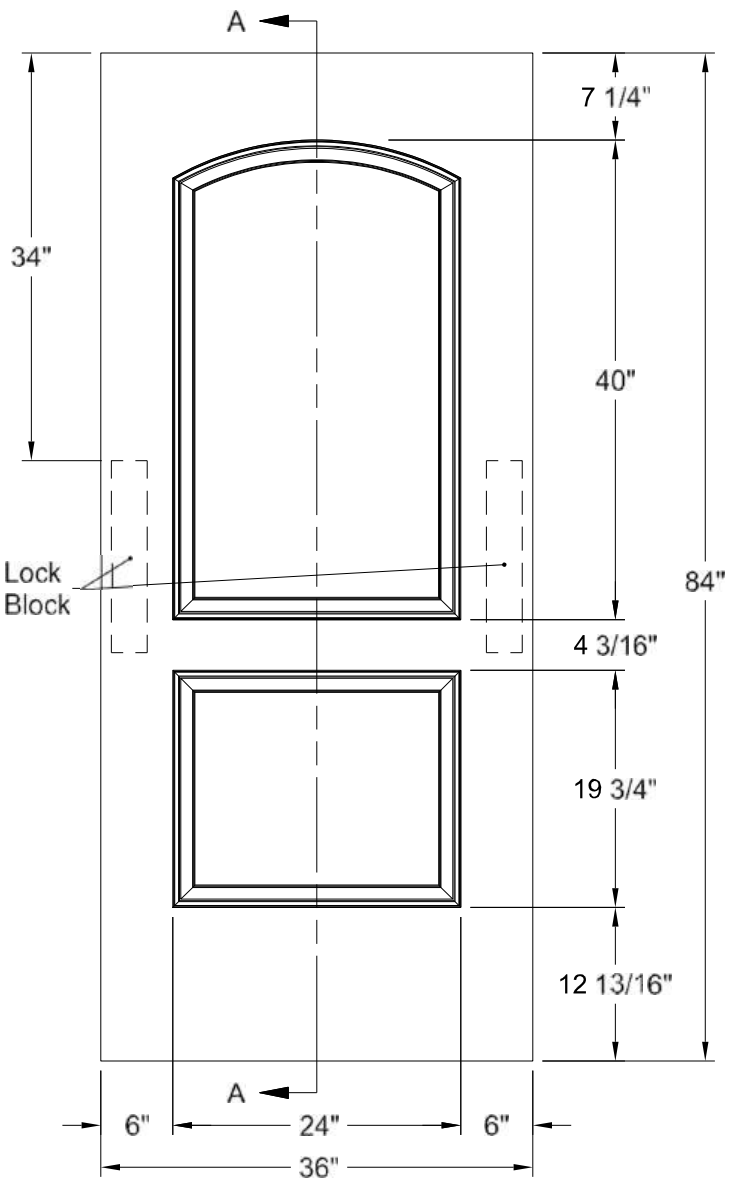

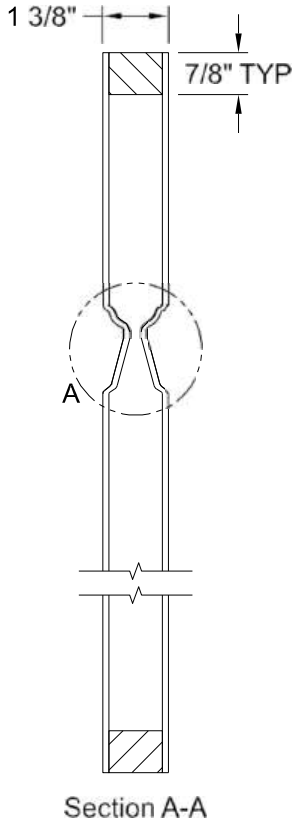

Section A-A

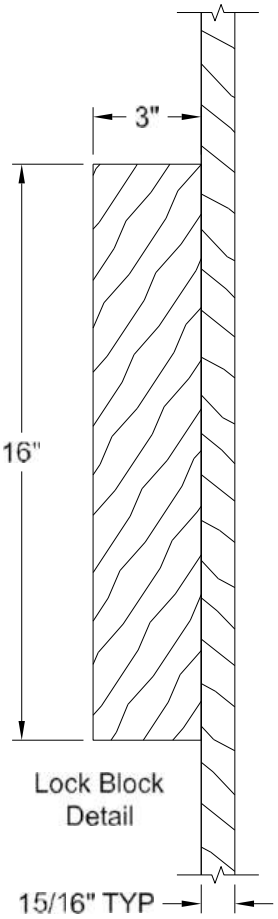

Lock Block
Detail

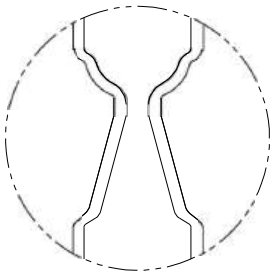

Detail A
Ovolo Sticking

Dimension Table
Door Size
3'-0" x 7'-0"

CORVADO SMOOTH 6'-8"

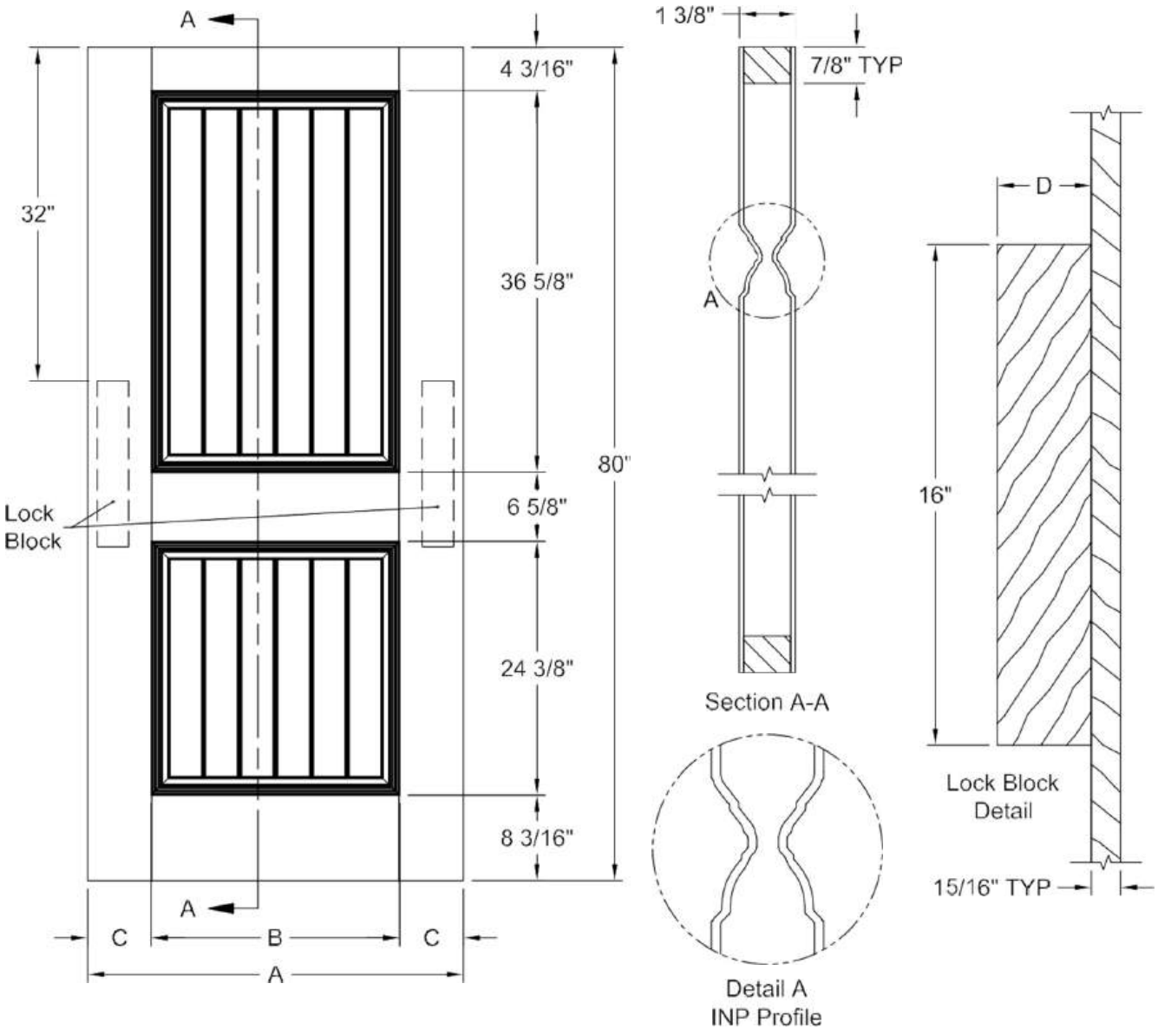

Dimension Table				
Door Size	A	B	C	D
3'-0" x 6'-8"	36"	25 5/8"	5 3/16"	3"
2'-10" x 6'-8"	34"	23 5/8"	5 3/16"	3"
2'-8" x 6'-8"	32"	23 5/8"	4 3/16"	3"
2'-6" x 6'-8"	30"	21 5/8"	4 3/16"	3"
2'-4" x 6'-8"	28"	19 5/8"	4 3/16"	3"
2'-2" x 6'-8"	26"	15 5/8"	5 3/16"	3"
2'-0" x 6'-8"	24"	15 5/8"	4 3/16"	3"
1'-10" x 6'-8"	22"	15 5/8"	3 3/16"	2 1/8"
1'-8" x 6'-8"	20"	20"	4"	3"
1'-6" x 6'-8"	18"	18"	3"	1 5/8"

CORVADO BIFOLD SMOOTH 6'-8"

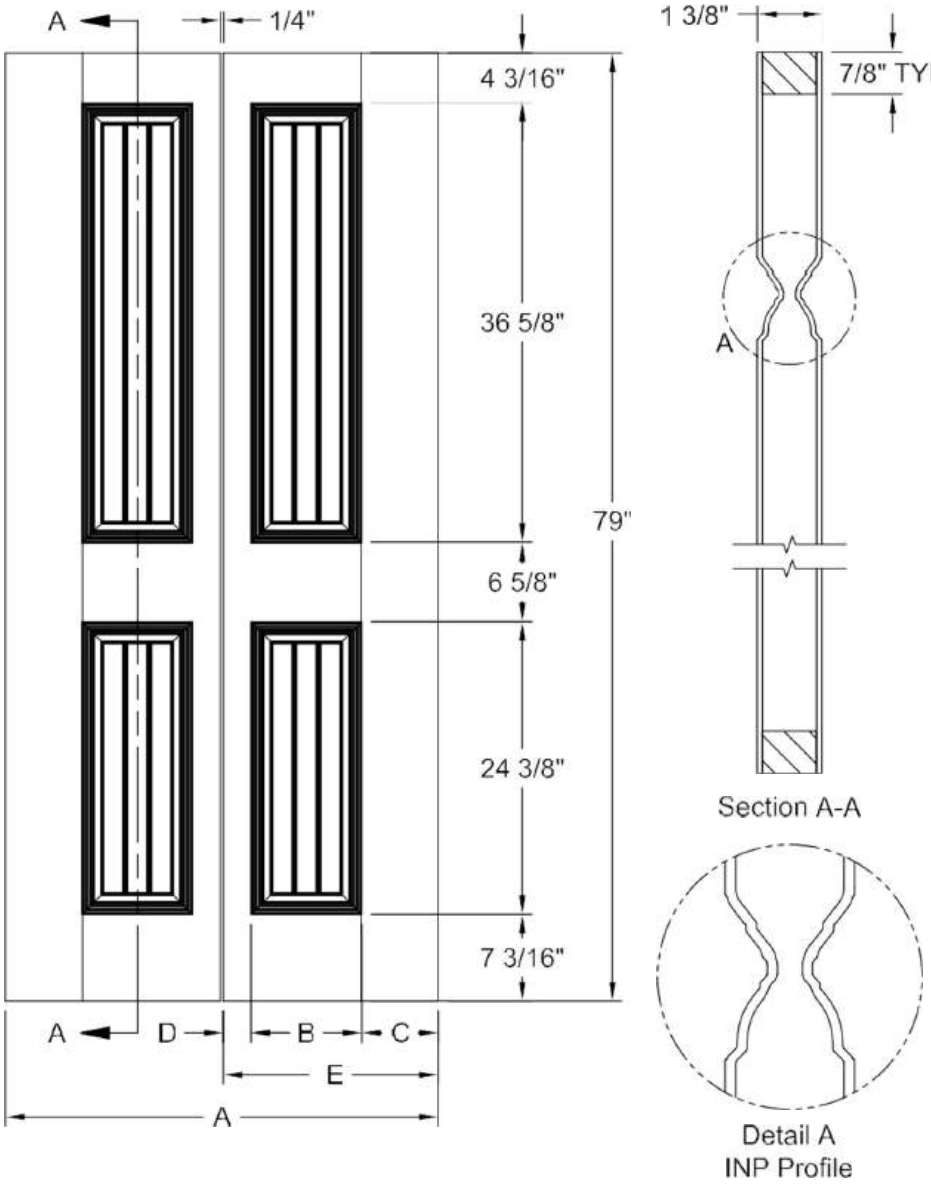

Dimension Table					
Door Size	A	B	C	D	E
3'-0" x 6'-8"	36"	10"	5 3/4"	2 1/8"	17 7/8"
2'-10" x 6'-8"	34"	10"	4 3/4"	2 1/8"	16 7/8"
2'-8" x 6'-8"	32"	10"	3 3/4"	2 1/8"	15 7/8"
2'-6" x 6'-8"	30"	10"	2 3/4"	2 1/8"	14 7/8"
2'-4" x 6'-8"	28"	10"	1 3/4"	2 1/8"	13 7/8"
2'-0" x 6'-8"	24"	8 3/16"	2 5/16"	1 3/8"	11 7/8"
1'-10" x 6'-8"	22"	8 3/16"	1 5/16"	1 3/8"	10 7/8"
1'-10" x 6'-8"	22"	10"	3 1/8"	1 3/8"	10 7/8"

CORVADO SMOOTH 7'-0"

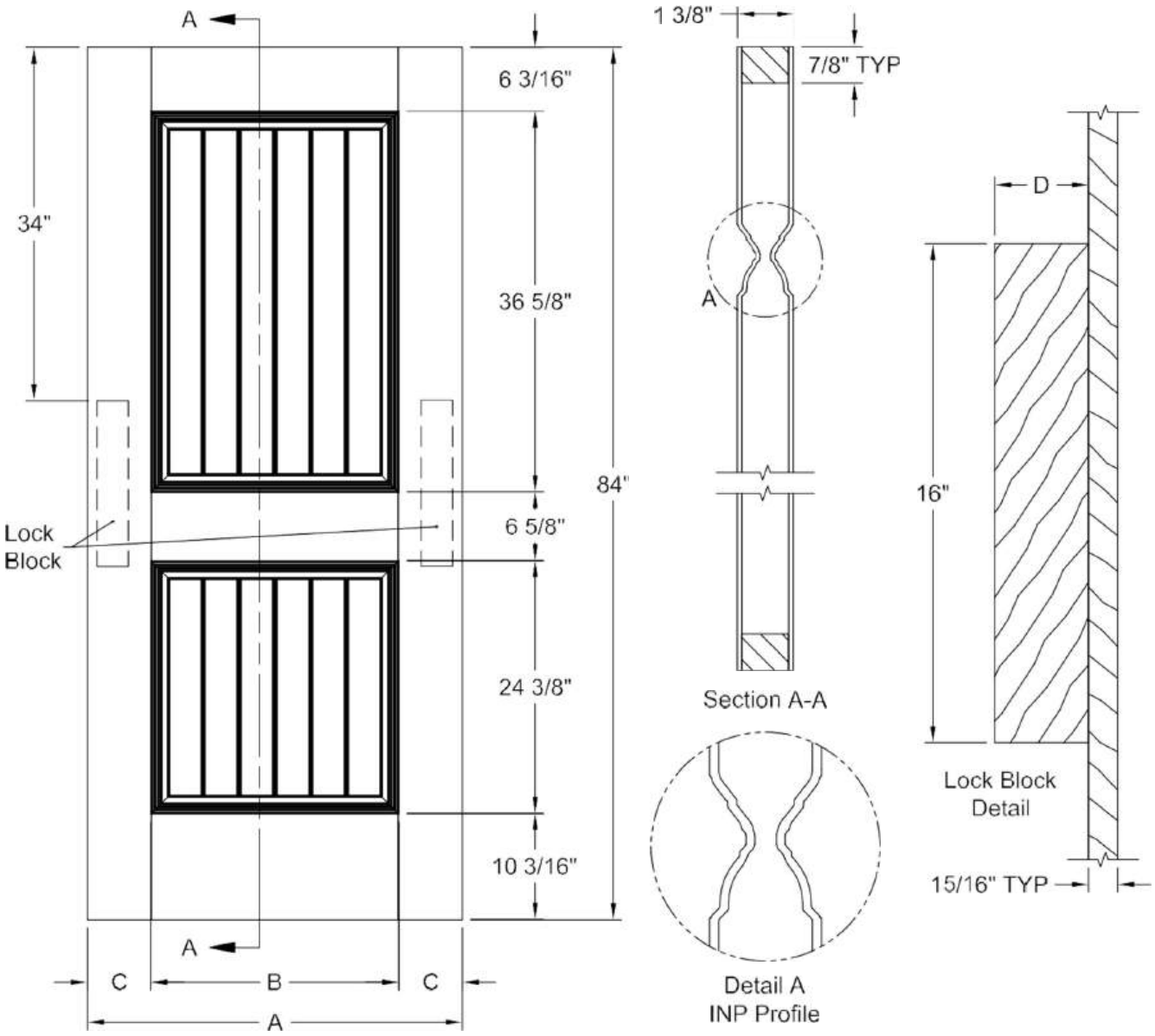

Dimension Table				
Door Size	A	B	C	D
3'-0" x 7'-0"	36"	25 5/8"	5 3/16"	3"
2'-10" x 7'-0"	34"	23 5/8"	5 3/16"	3"
2'-8" x 7'-0"	32"	23 5/8"	4 3/16"	3"
2'-6" x 7'-0"	30"	21 5/8"	4 3/16"	3"
2'-4" x 7'-0"	28"	19 5/8"	4 3/16"	3"
2'-2" x 7'-0"	26"	15 5/8"	5 3/16"	3"
2'-0" x 7'-0"	24"	15 5/8"	4 3/16"	3"
1'-10" x 7'-0"	22"	15 5/8"	3 3/16"	2 1/8"
1'-8" x 7'-0"	20"	20"	4"	3"
1'-6" x 7'-0"	18"	18"	3"	1 5/8"

CORVADO BIFOLD SMOOTH 7'-0"

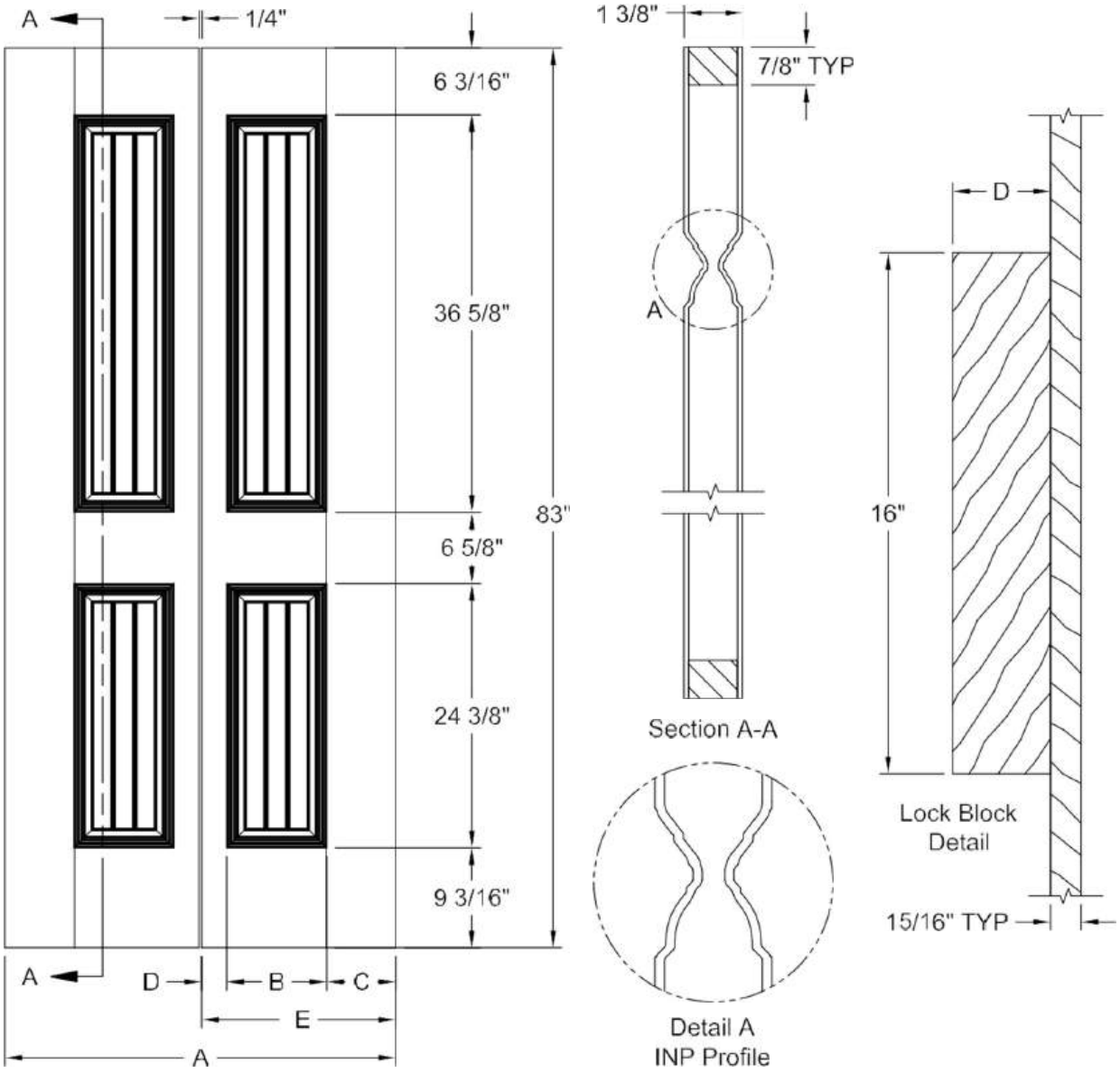

Dimension Table					
Door Size	A	B	C	D	E
3'-0" x 7'-0"	18"	10"	5 3/4"	2 1/8"	17 7/8"
2'-10" x 7'-0"	17"	10"	4 3/4"	2 1/8"	16 7/8"
2'-8" x 7'-0"	16"	10"	3 3/4"	2 1/8"	15 7/8"
2'-6" x 7'-0"	15"	10"	2 3/4"	2 1/8"	14 7/8"
2'-4" x 7'-0"	14"	10"	1 3/4"	2 1/8"	13 7/8"
2'-0" x 7'-0"	12"	8 3/16"	2 5/16"	2 3/8"	11 7/8"
1'-10" x 7'-0"	11"	8 3/16"	1 5/16"	2 3/8"	10 7/8"

CORVADO SMOOTH 8'0"

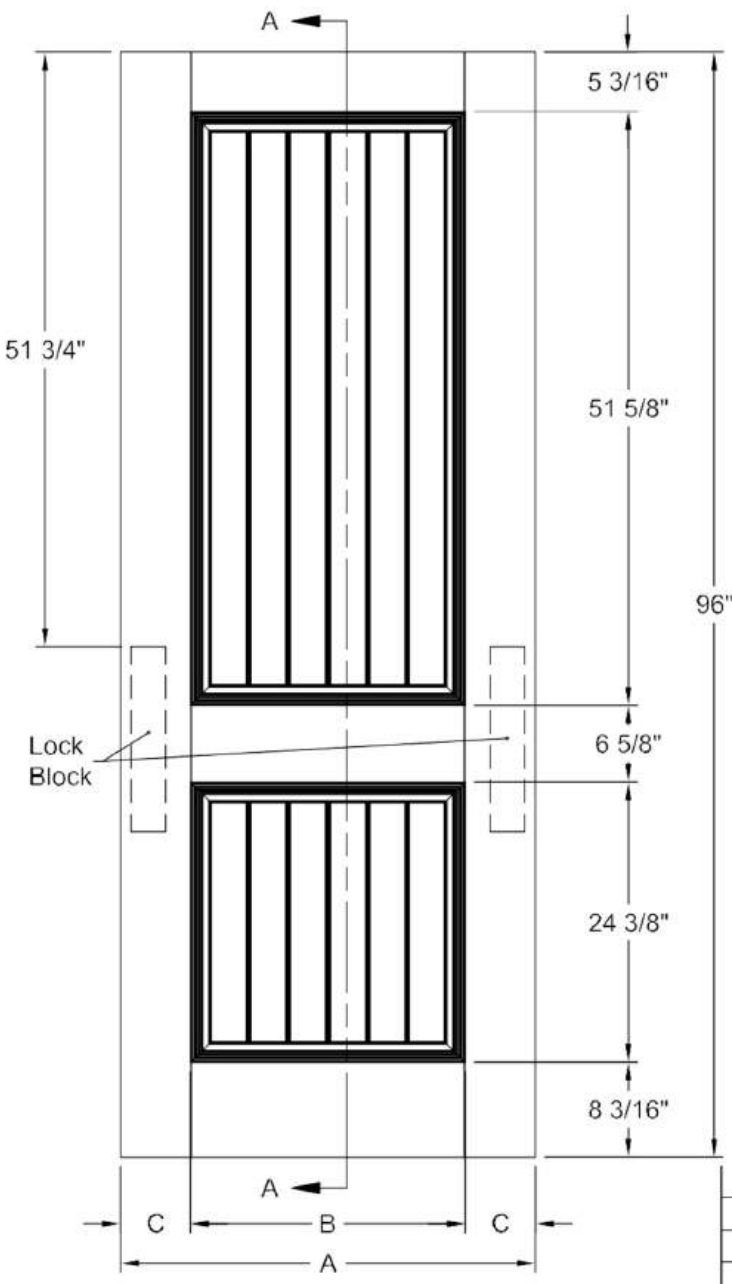

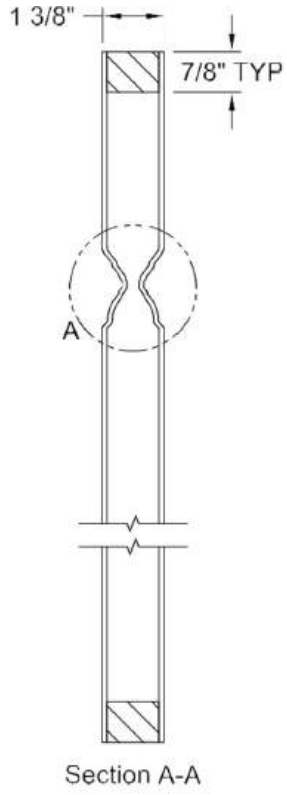

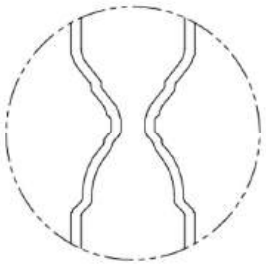

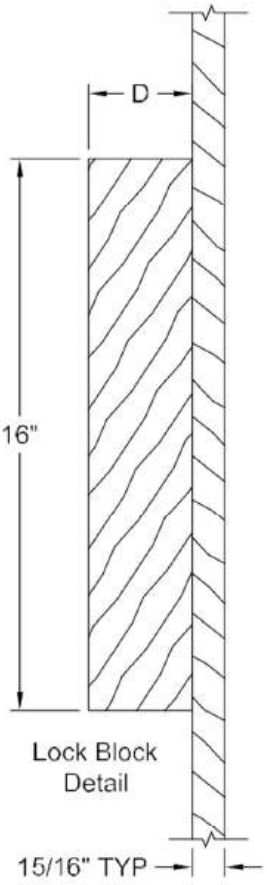

Dimension Table

Door Size	A	B	C	D
3'-0" x 8'-0"	36"	25 5/8"	5 3/16"	3"
2'-10" x 8'-0"	34"	23 5/8"	5 3/16"	3"
2'-8" x 8'-0"	32"	23 5/8"	4 3/16"	3"
2'-6" x 8'-0"	30"	21 5/8"	4 3/16"	3"
2'-4" x 8'-0"	28"	19 5/8"	4 3/16"	3"
2'-2" x 8'-0"	26"	15 5/8"	5 3/16"	3"
2'-0" x 8'-0"	24"	15 5/8"	4 3/16"	3"
1'-10" x 8'-0"	22"	15 5/8"	3 3/16"	2 1/8"
1'-8" x 8'-0"	20"	20"	4"	3"
1'-6" x 8'-0"	18"	18"	3"	1 5/8"

CORVADO BIFOLD SMOOTH 8'-0"

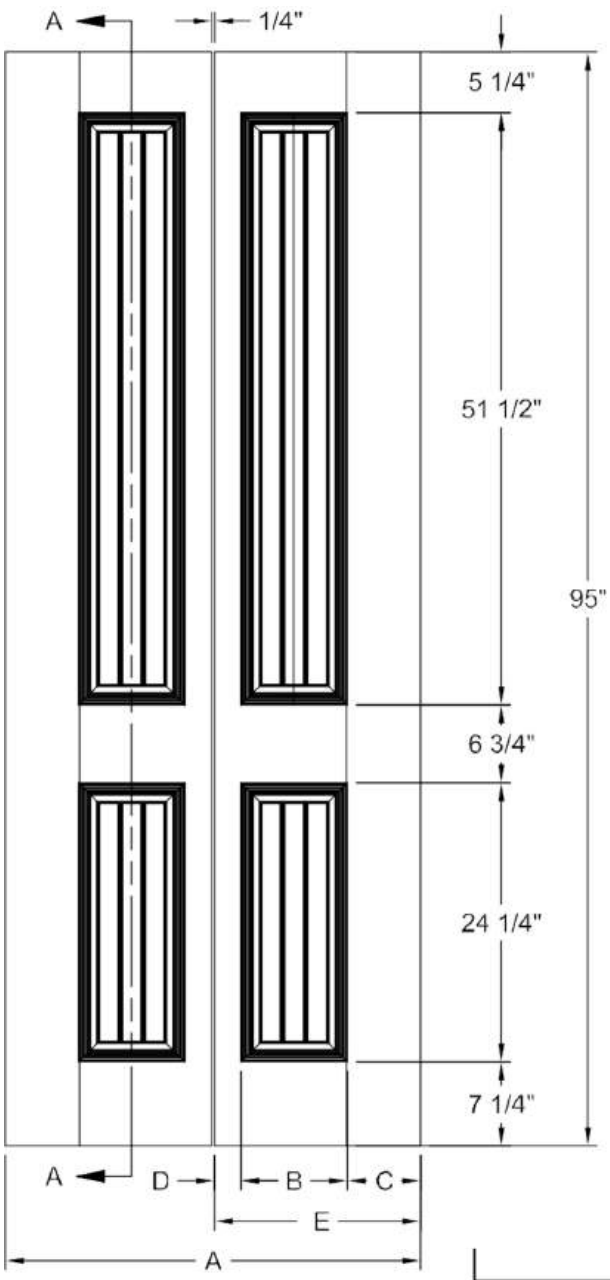

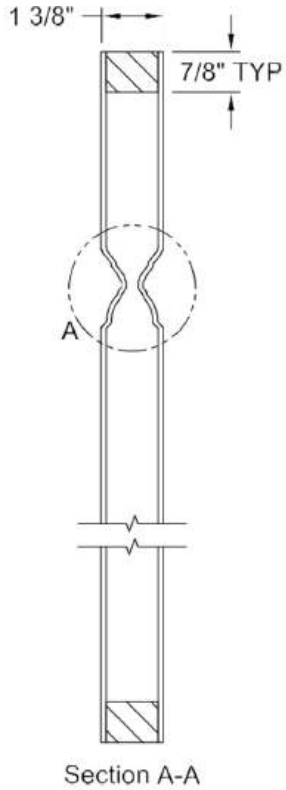

Section A-A

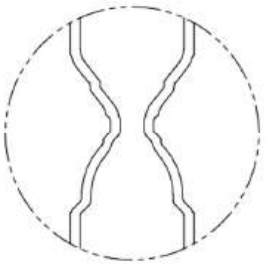

Detail A
INP Profile

Dimension Table					
Door Size	A	B	C	D	E
3'-0" x 8'-0"	18"	10"	5 3/4"	2 1/8"	17 7/8"
2'-10" x 8'-0"	17"	10"	4 3/4"	2 1/8"	16 7/8"
2'-8" x 8'-0"	16"	10"	3 3/4"	2 1/8"	15 7/8"
2'-6" x 8'-0"	15"	10"	2 3/4"	2 1/8"	14 7/8"
2'-4" x 8'-0"	14"	10"	1 3/4"	2 1/8"	13 7/8"
2'-0" x 8'-0"	12"	8 3/16"	2 5/16"	2 3/8"	11 7/8"
1'-10" x 8'-0"	11"	8 3/16"	1 5/16"	2 3/8"	10 7/8"

COVENTRY SMOOTH 6'-8"

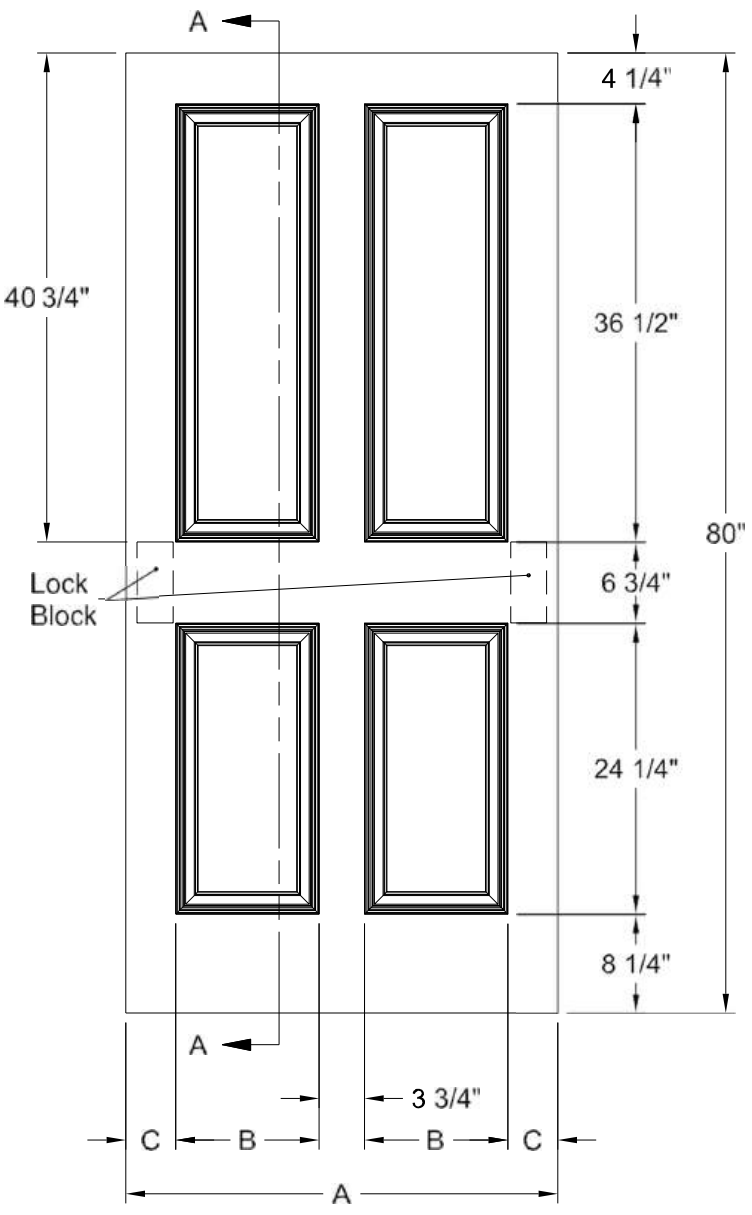

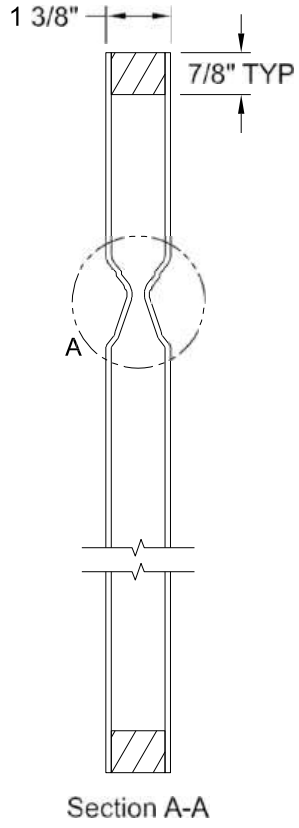

Section A-A

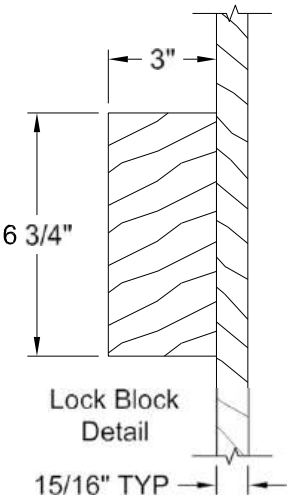

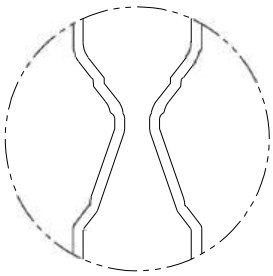

Detail A
INP Profile

Dimension Table			
Door Size	A	B	C
3'-0" x 6'-8"	36"	12"	4 1/8"
2'-10" x 6'-8"	34"	10"	5 1/8"
2'-8" x 6'-8"	32"	10"	4 1/8"
2'-6" x 6'-8"	30"	9"	4 1/8"
2'-4" x 6'-8"	28"	8"	4 1/8"
2'-2" x 6'-8"	26"	6"	5 1/8"
2'-0" x 6'-8"	24"	6"	4 1/8"
1'-10" x 6'-8"	22"	6"	3 1/8"

COVENTRY SMOOTH 6'-8"

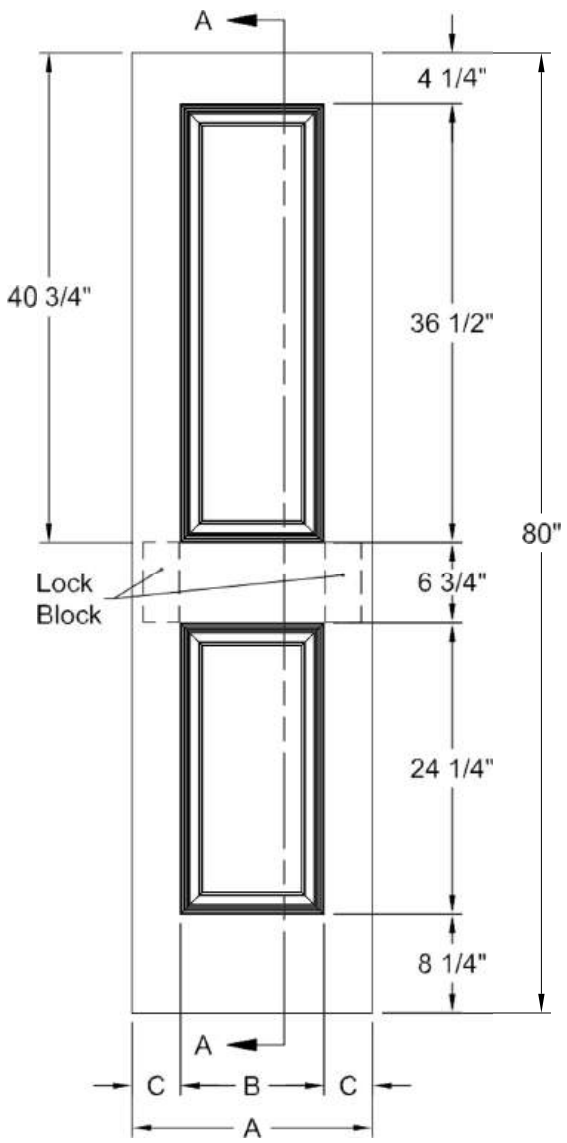

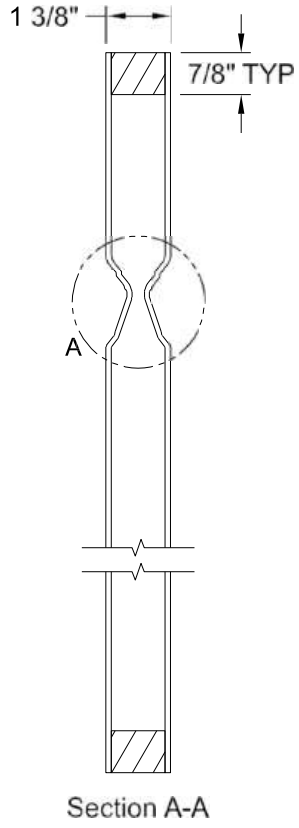

Section A-A

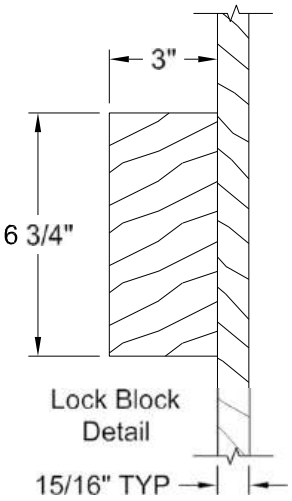

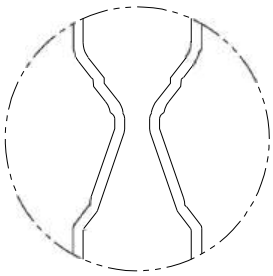

Detail A
INP Profile

Dimension Table			
Door Size	A	B	C
1'-8" x 6'-8"	20"	12"	4"
1'-6" x 6'-8"	18"	12"	3"
1'-4" x 6'-8"	16"	7"	4 1/2"
1'-3" x 6'-8"	15"	7"	4"
1'-2" x 6'-8"	14"	7"	3 1/2"
1'-0" x 6'-8"	12"	7"	2 1/2"

COVENTRY BIFOLD SMOOTH 6'-8"

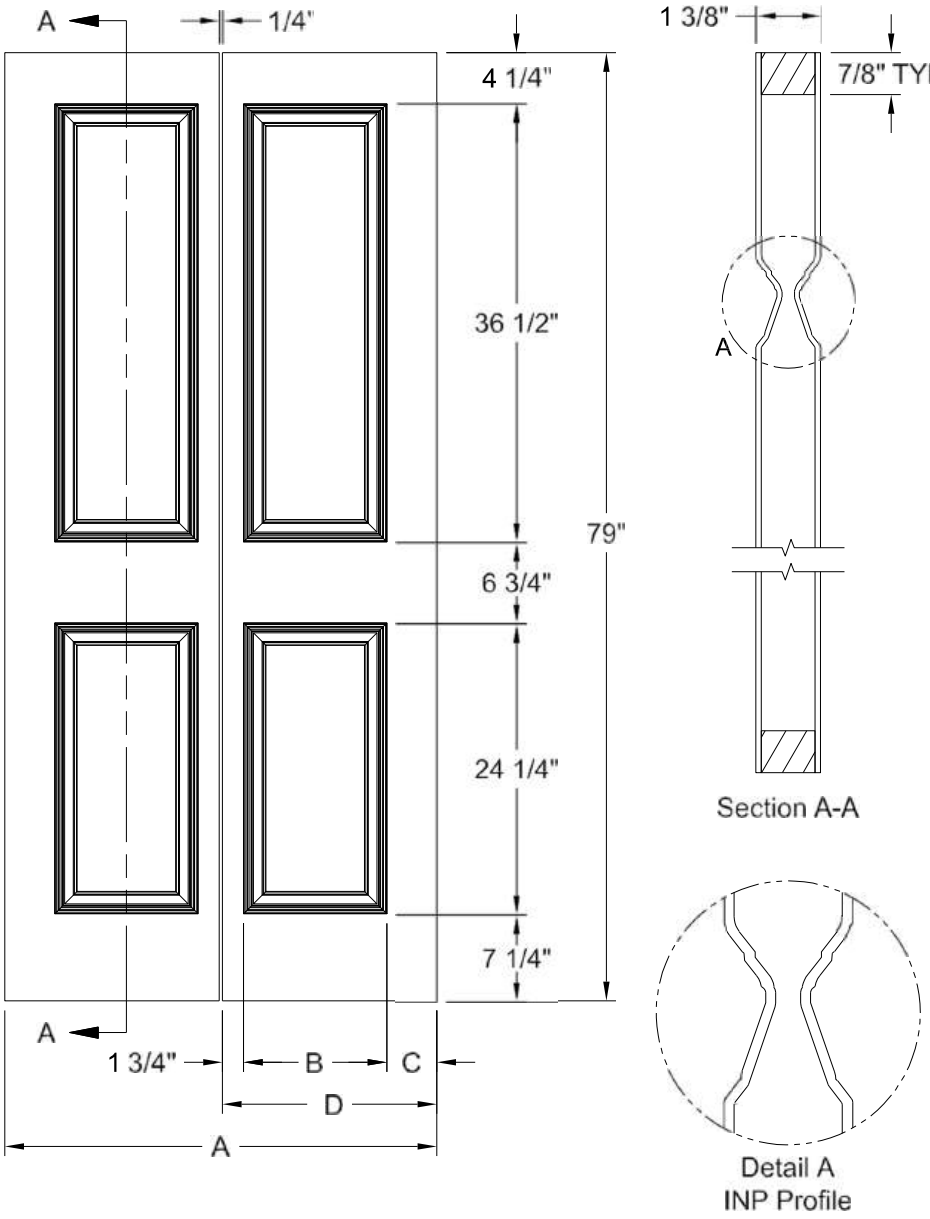

Dimension Table				
Door Size	A	B	C	D
3'-0" x 6'-8"	36"	12"	4 1/8"	17 7/8"
2'-10" x 6'-8"	34"	10"	5 1/8"	16 7/8"
2'-8" x 6'-8"	32"	10"	4 1/8"	15 7/8"
2'-6" x 6'-8"	30"	9"	4 1/8"	14 7/8"
2'-4" x 6'-8"	28"	8"	4 1/8"	13 7/8"
2'-2" x 6'-8"	26"	6"	5 1/8"	12 7/8"
2'-0" x 6'-8"	24"	6"	4 1/8"	11 7/8"
1'-10" x 6'-8"	22"	6"	3 1/8"	10 7/8"

COVENTRY SMOOTH 7'-0"

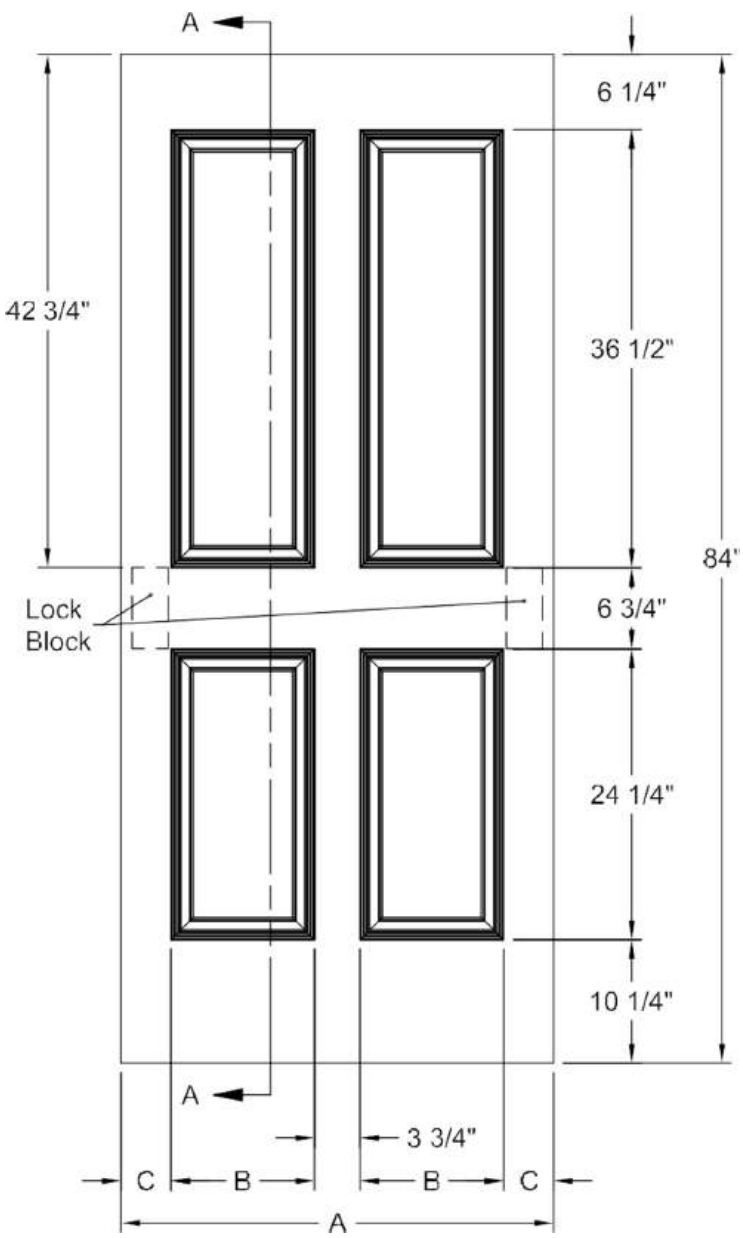

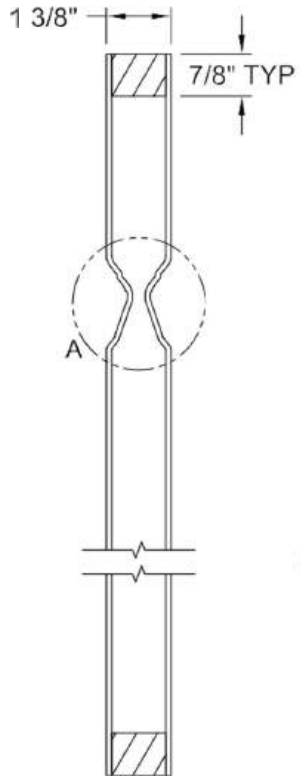

Section A-A

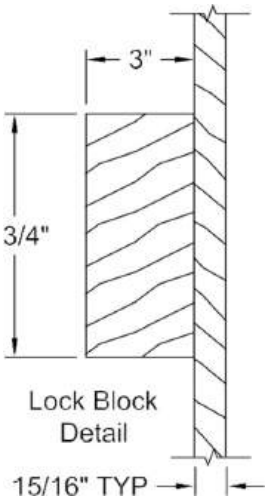

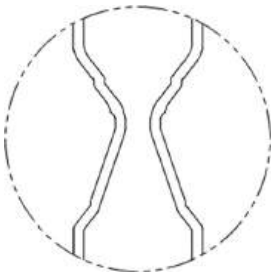

Detail A
INP Profile

Dimension Table			
Door Size	A	B	C
3'-0" x 7'-0"	36"	12"	4 1/8"
2'-10" x 7'-0"	34"	10"	5 1/8"
2'-8" x 7'-0"	32"	10"	4 1/8"
2'-6" x 7'-0"	30"	9"	4 1/8"
2'-4" x 7'-0"	28"	8"	4 1/8"
2'-2" x 7'-0"	26"	6"	5 1/8"
2'-0" x 7'-0"	24"	6"	4 1/8"
1'-10" x 7'-0"	22"	6"	3 1/8"

COVENTRY SMOOTH 7'-0"

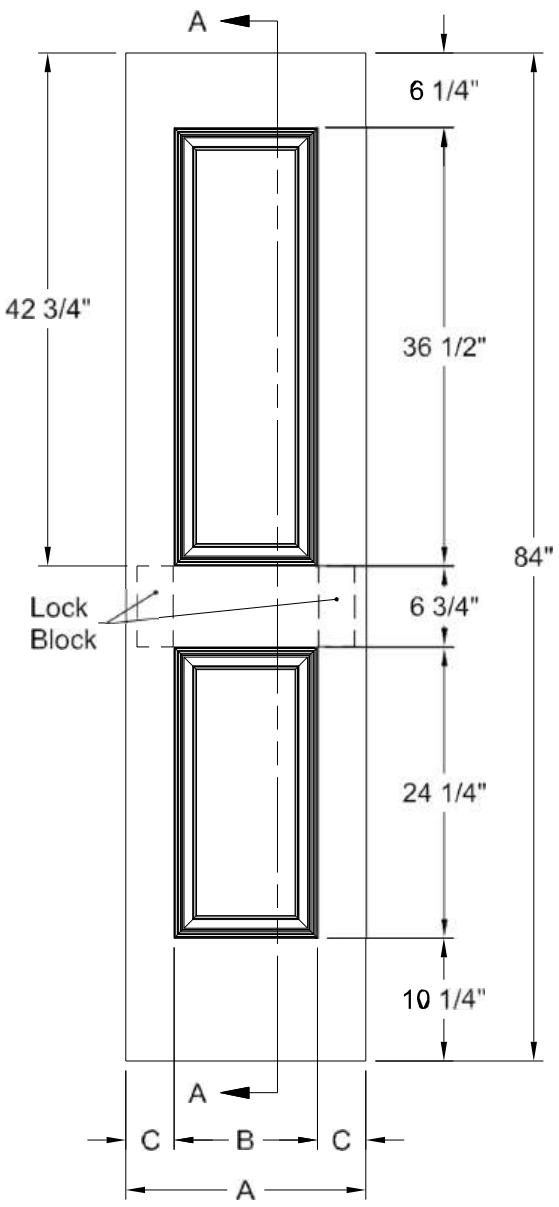

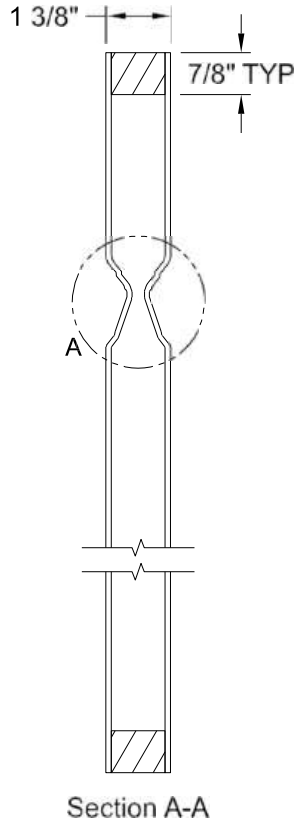

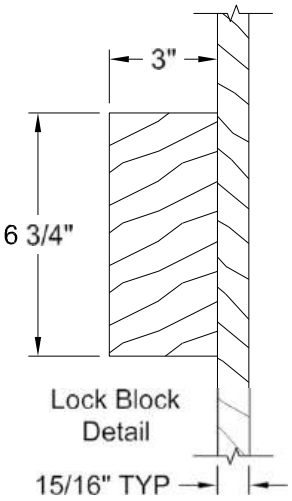

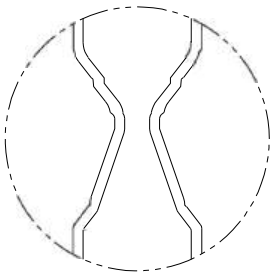

Detail A
INP Profile

Dimension Table			
Door Size	A	B	C
1'-8" x 7'-0"	20"	12"	4"
1'-6" x 7'-0"	18"	12"	3"
1'-4" x 7'-0"	16"	7"	4 1/2"
1'-3" x 7'-0"	15"	7"	4"
1'-2" x 7'-0"	14"	7"	3 1/2"
1'-0" x 7'-0"	12"	7"	2 1/2"

COVENTRY BIFOLD SMOOTH 7'-0"

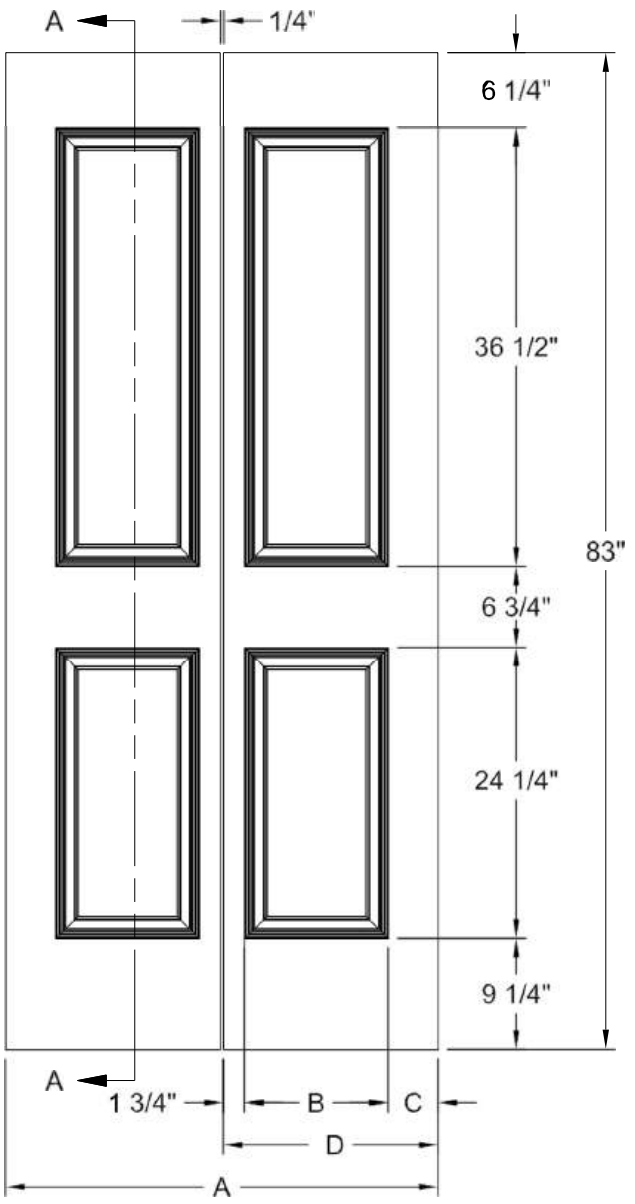

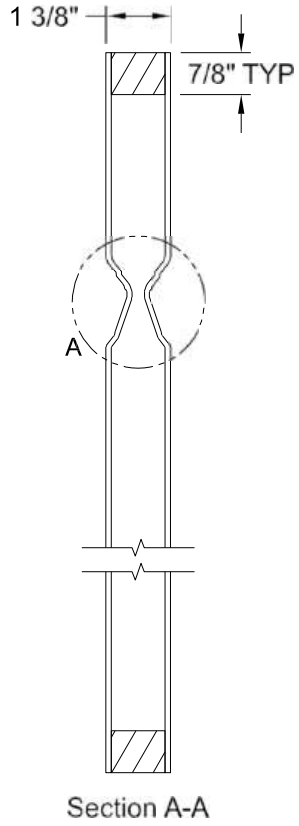

Section A-A

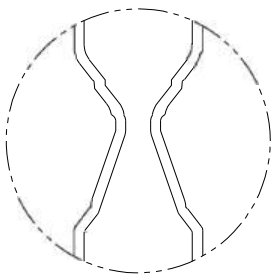

Detail A
INP Profile

Dimension Table				
Door Size	A	B	C	D
3'-0" x 7'-0"	36"	12"	4 1/8"	17 7/8"
2'-10" x 7'-0"	34"	10"	5 1/8"	16 7/8"
2'-8" x 7'-0"	32"	10"	4 1/8"	15 7/8"
2'-6" x 7'-0"	30"	9"	4 1/8"	14 7/8"
2'-4" x 7'-0"	28"	8"	4 1/8"	13 7/8"
2'-2" x 7'-0"	26"	6"	5 1/8"	12 7/8"
2'-0" x 7'-0"	24"	6"	4 1/8"	11 7/8"
1'-10" x 7'-0"	22"	6"	3 1/8"	10 7/8"

COVENTRY SMOOTH 8'-0"

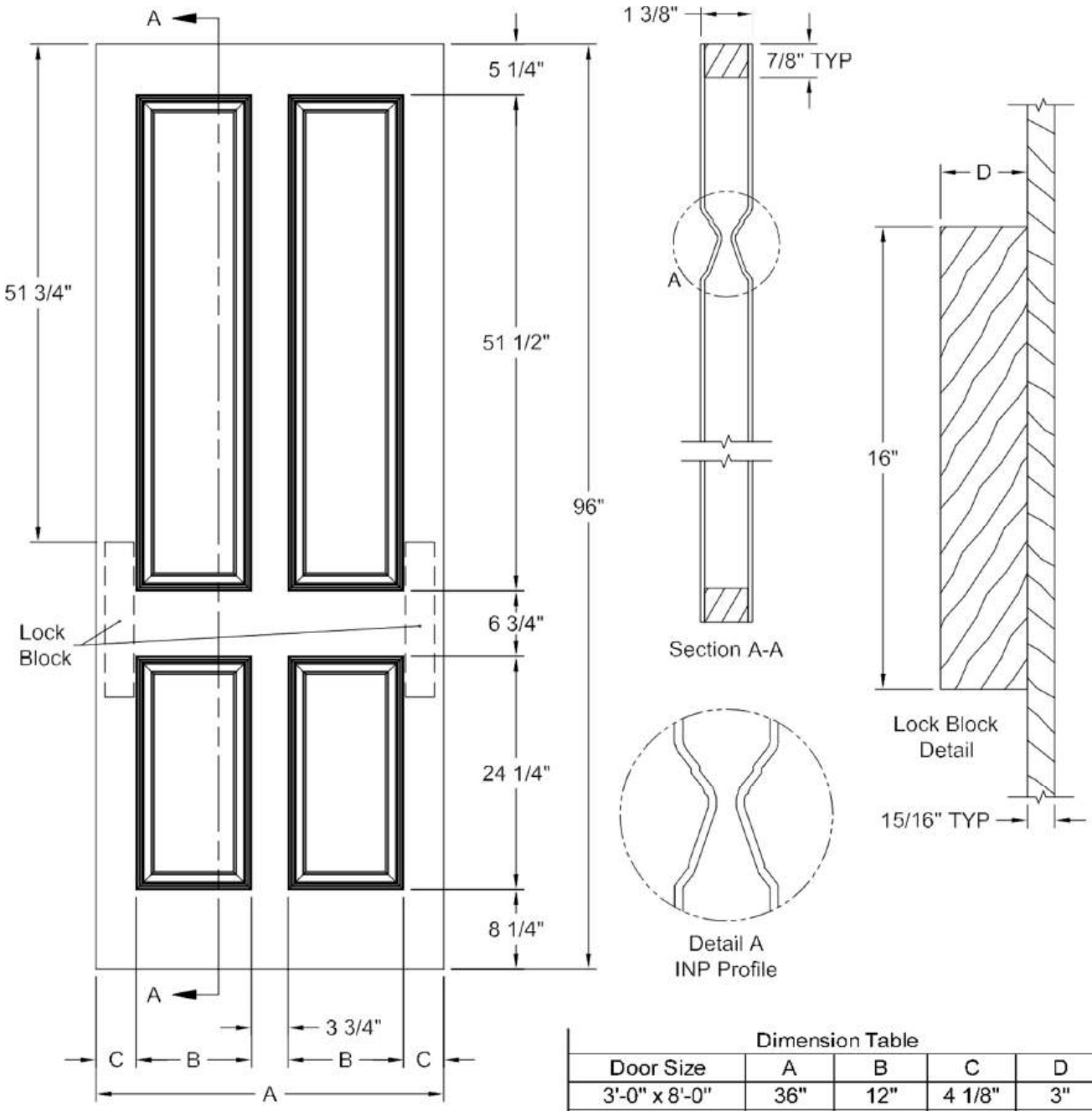

Dimension Table				
Door Size	A	B	C	D
3'-0" x 8'-0"	36"	12"	4 1/8"	3"
2'-10" x 8'-0"	34"	10"	5 1/8"	3"
2'-8" x 8'-0"	32"	10"	4 1/8"	3"
2'-6" x 8'-0"	30"	9"	4 1/8"	3"
2'-4" x 8'-0"	28"	8"	4 1/8"	3"
2'-2" x 8'-0"	26"	6"	5 1/8"	3"
2'-0" x 8'-0"	24"	6"	4 1/8"	3"
1'-10" x 8'-0"	22"	6"	3 1/8"	2 1/8"

COVENTRY SMOOTH 8'-0"

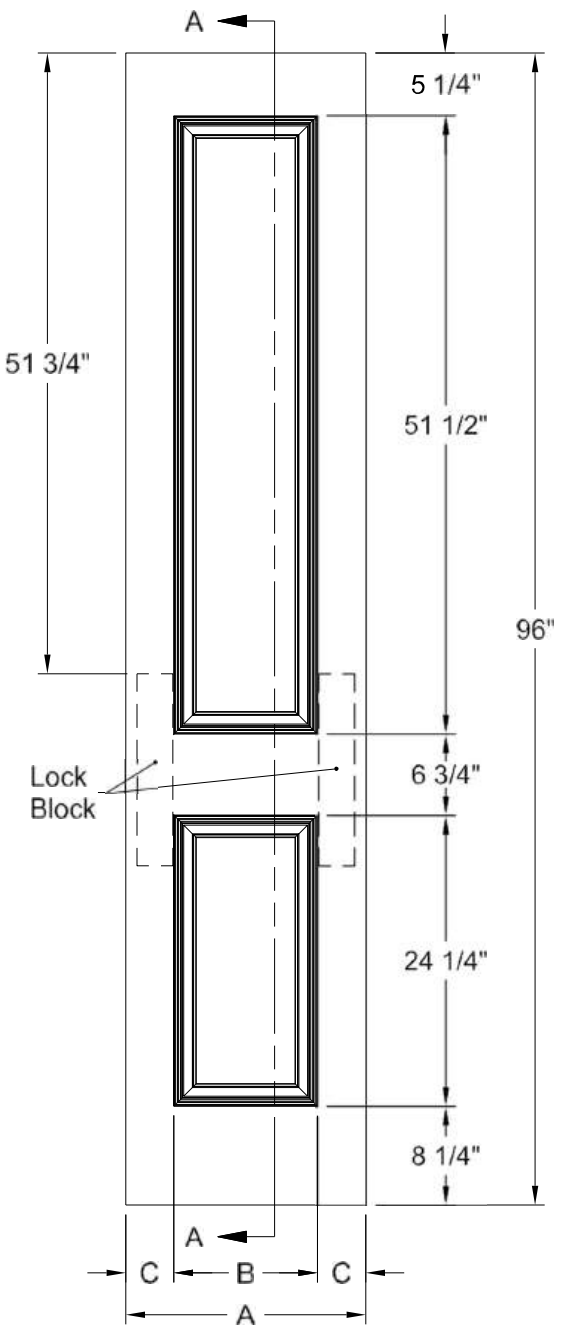

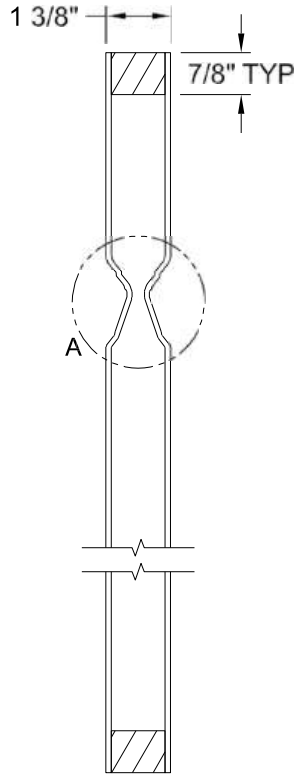

Section A-A

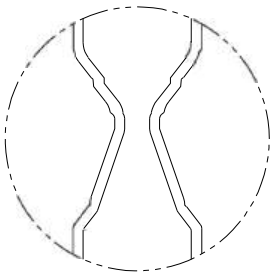

Detail A
INP Profile

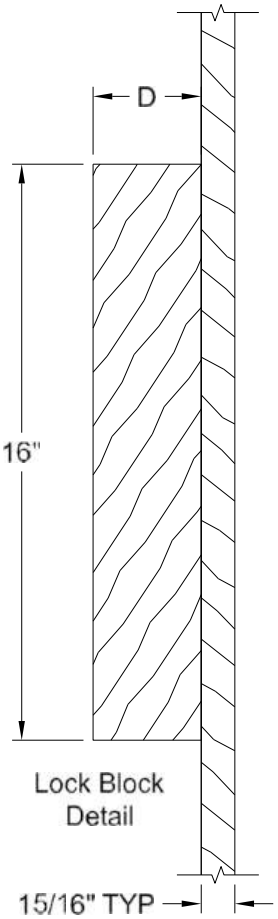

Lock Block
Detail

Dimension Table				
Door Size	A	B	C	D
1'-8" x 8'-0"	20"	12"	4"	3"
1'-6" x 8'-0"	18"	12"	3"	1 5/8"
1'-4" x 8'-0"	16"	7"	4 1/2"	3"
1'-3" x 6'-8"	15"	7"	4"	3"
1'-2" x 6'-8"	14"	7"	3 1/2"	2 1/8"
1'-0" x 6'-8"	12"	7"	2 1/2"	1 3/8"

COVENTRY BIFOLD SMOOTH 8'-0"

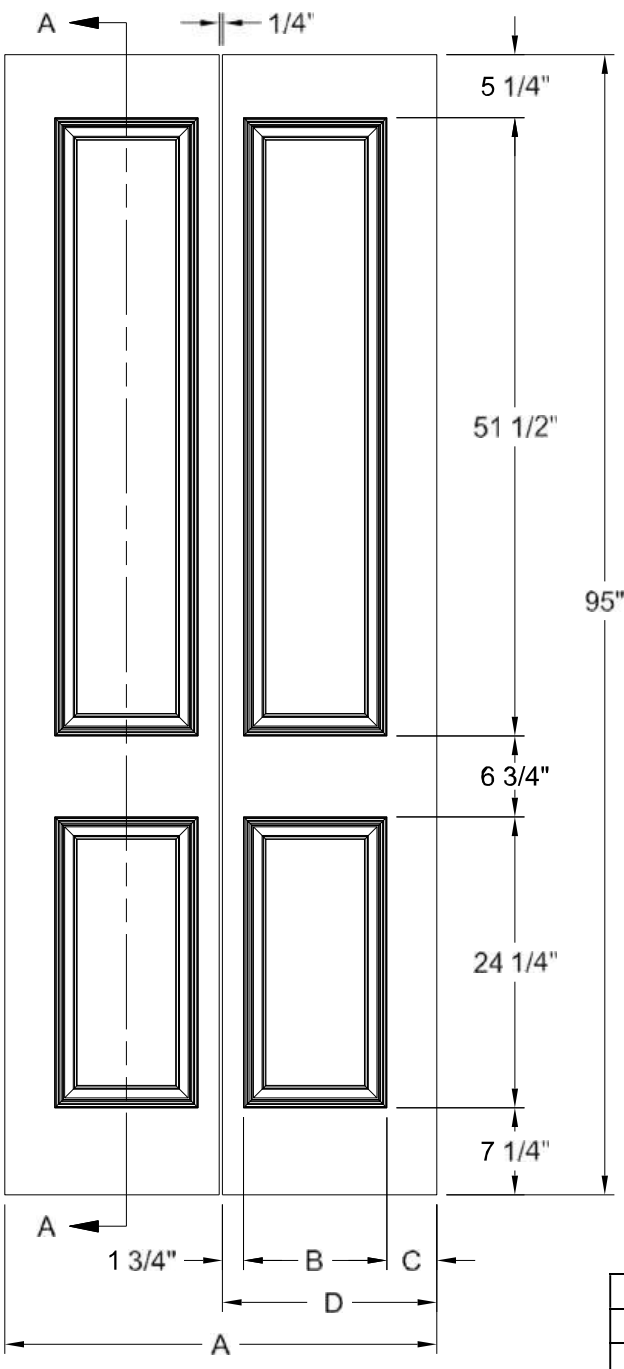

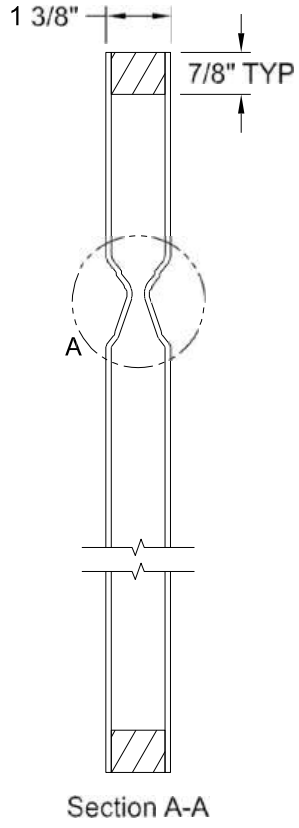

Section A-A

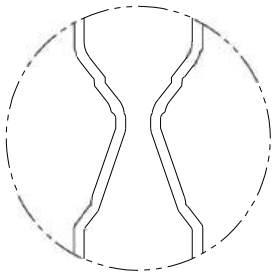

Detail A
INP Profile

Dimension Table				
Door Size	A	B	C	D
3'-0" x 8'-0"	36"	12"	4 1/8"	17 7/8"
2'-10" x 8'-0"	34"	10"	5 1/8"	16 7/8"
2'-8" x 8'-0"	32"	10"	4 1/8"	15 7/8"
2'-6" x 8'-0"	30"	9"	4 1/8"	14 7/8"
2'-4" x 8'-0"	28"	8"	4 1/8"	13 7/8"
2'-2" x 8'-0"	26"	6"	5 1/8"	12 7/8"
2'-0" x 8'-0"	24"	6"	4 1/8"	11 7/8"
1'-10" x 8'-0"	22"	6"	3 1/8"	10 7/8"

CRAFTSMAN SMOOTH 6'-8"

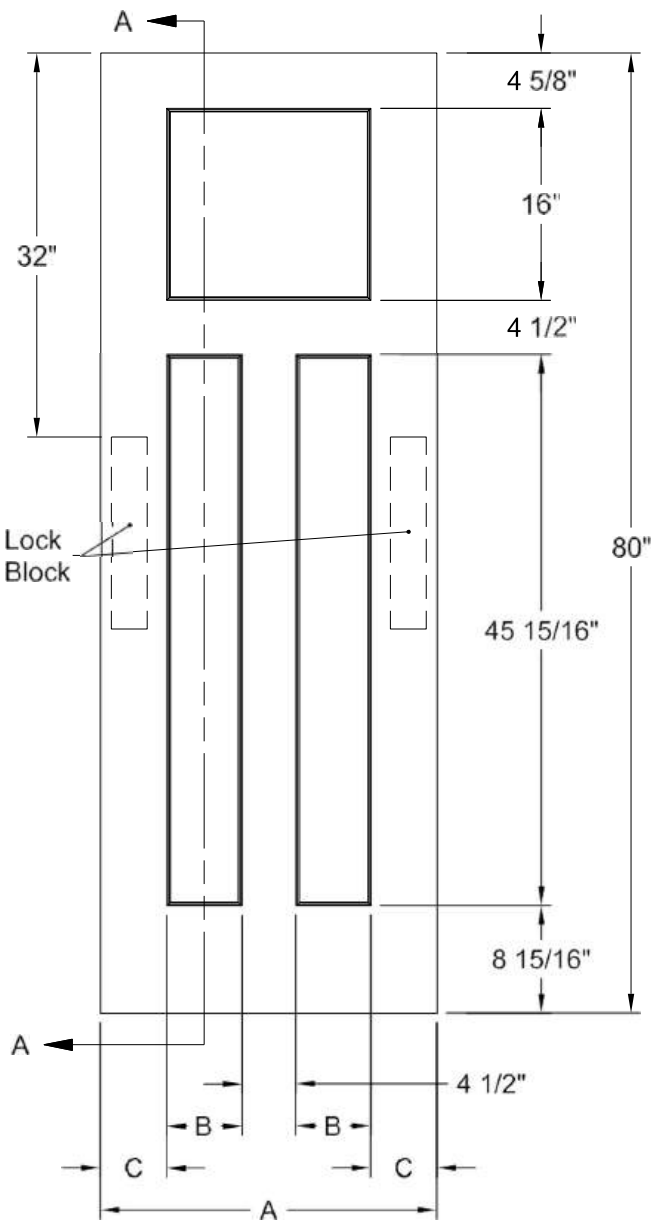

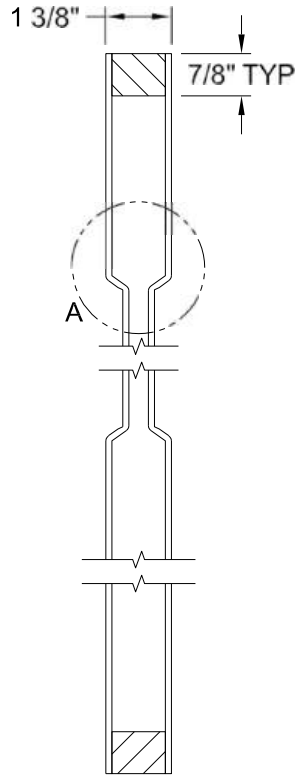

Section A-A

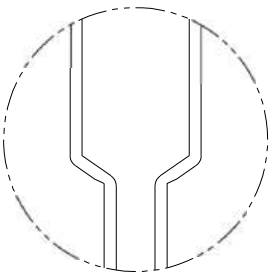

Detail A
Craftsman Sticking

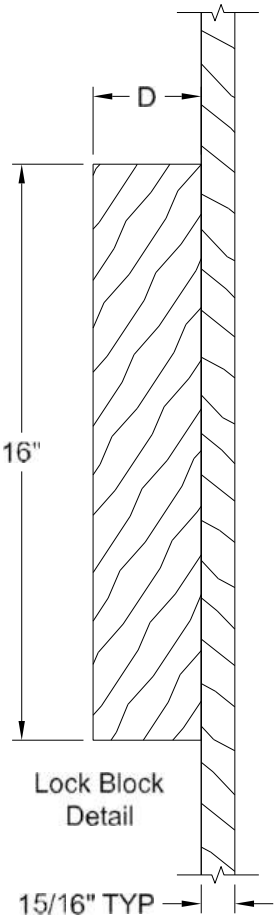

Lock Block
Detail

Dimension Table			
Door Size	A	B	C
3'-0" x 6'-8"	36"	10 1/4"	5 1/2"
2'-10" x 6'-8"	34"	10 1/4"	4 1/2"
2'-8" x 6'-8"	32"	8 1/4"	5 1/2"
2'-6" x 6'-8"	30"	8 1/4"	4 1/2"
2'-4" x 6'-8"	28"	6 1/4"	5 1/2"
2'-2" x 6'-8"	26"	6 1/4"	4 1/2"
2'-0" x 6'-8"	24"	5 1/4"	4 1/2"

CRAFTSMAN SMOOTH 6'-8"

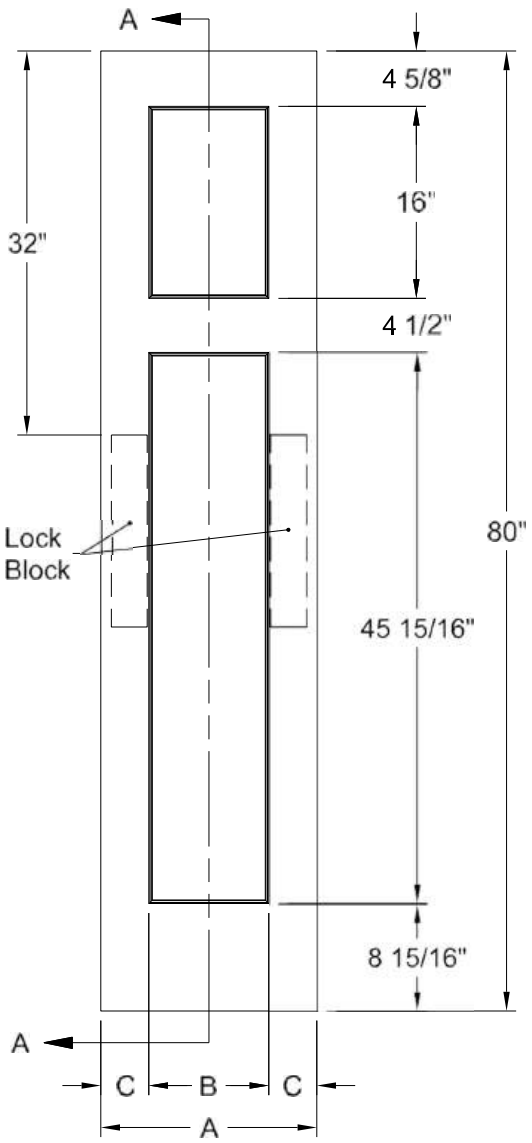

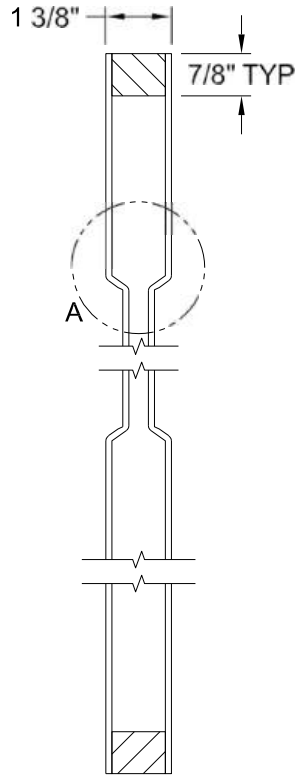

Section A-A

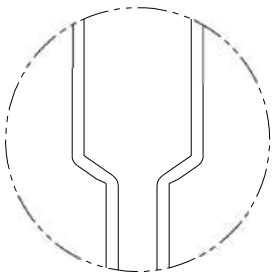

Detail A
Craftsman Sticking

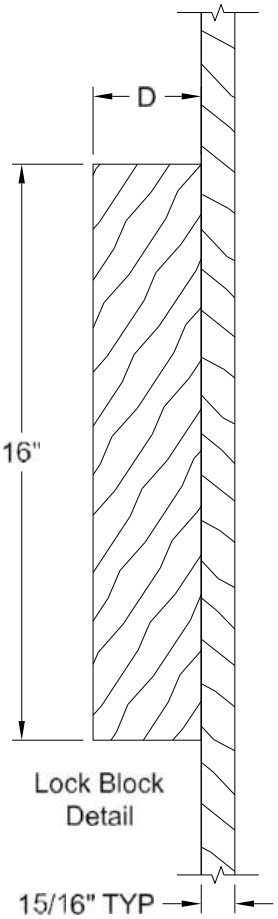

Lock Block
Detail

Dimension Table				
Door Size	A	B	C	D
1'-10" x 6'-8"	22"	10"	6"	3"
1'-8" x 6'-8"	20"	10"	5"	3"
1'-6" x 6'-8"	18"	10"	4"	3"
1'-4" x 6'-8"	16"	8 1/4"	3 7/8"	2 11/16"
1'-3" x 6'-8"	15"	6"	4 1/2"	3"
1'-2" x 6'-8"	14"	6"	4"	3"
1'-0" x 6'-8"	12"	4"	4"	2 1/8"

CRAFTSMAN BIFOLD SMOOTH 6'-8"

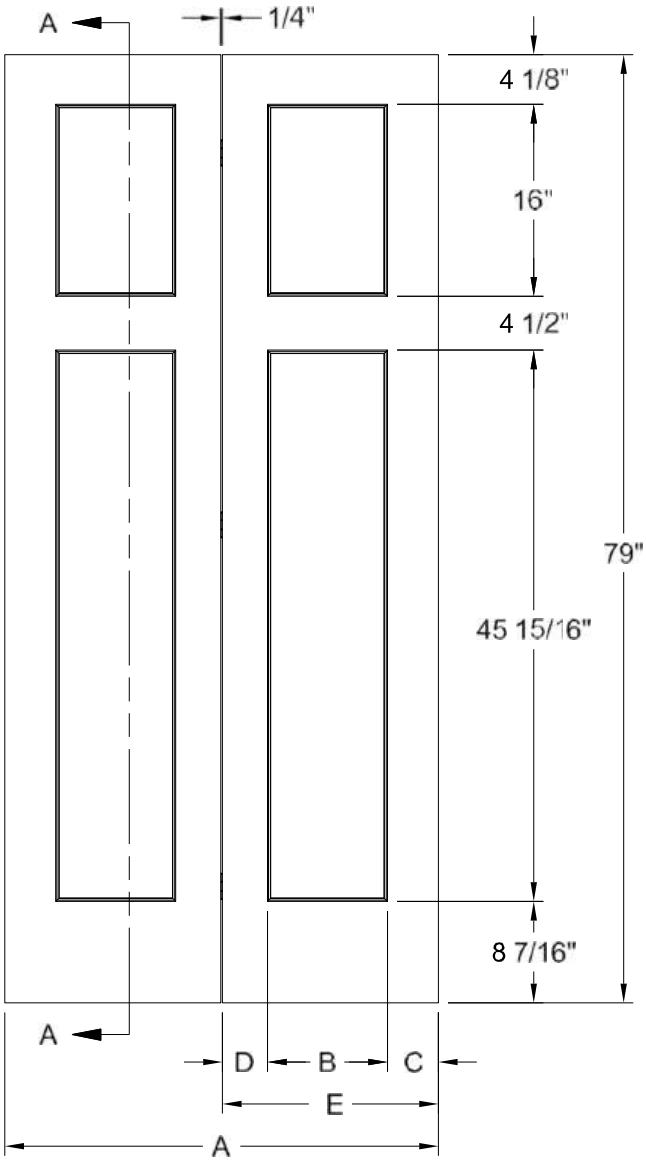

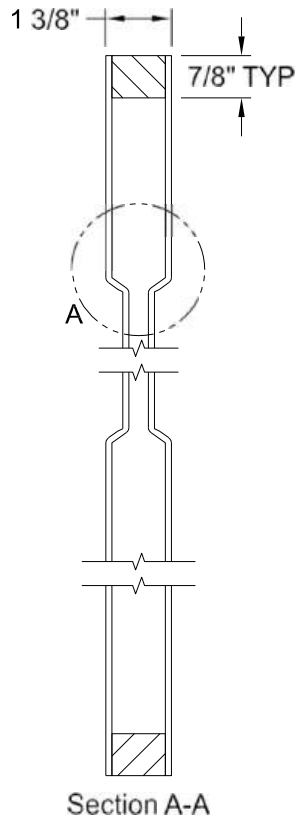

Section A-A

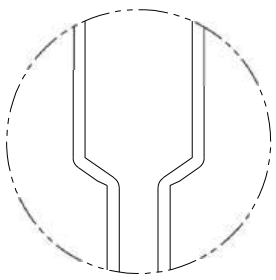

Detail A
Craftsman Sticking

Dimension Table

Door Size	A	B	C	D	E
3'-0" x 6'-8"	36"	10"	4 1/4"	3 3/4"	17 7/8"
2'-10" x 6'-8"	34"	8 1/4"	4 1/2"	4 1/4"	16 7/8"
2'-8" x 6'-8"	32"	8 1/4"	4"	3 3/4"	15 7/8"
2'-6" x 6'-8"	30"	6"	4 5/8"	4 3/8"	14 7/8"
2'-4" x 6'-8"	28"	6"	4 1/8"	3 7/8"	13 7/8"
2'-2" x 6'-8"	26"	6"	3 5/8"	3 3/8"	12 7/8"
2'-0" x 6'-8"	24"	4"	4 1/8"	3 7/8"	11 7/8"
1'-10" x 6'-8"	22"	4"	3 5/8"	3 3/8"	10 7/8"
1'-8" x 6'-8"	20"	4"	31/8"	2 7/8"	9 7/8"

CRAFTSMAN SMOOTH 7'-0"

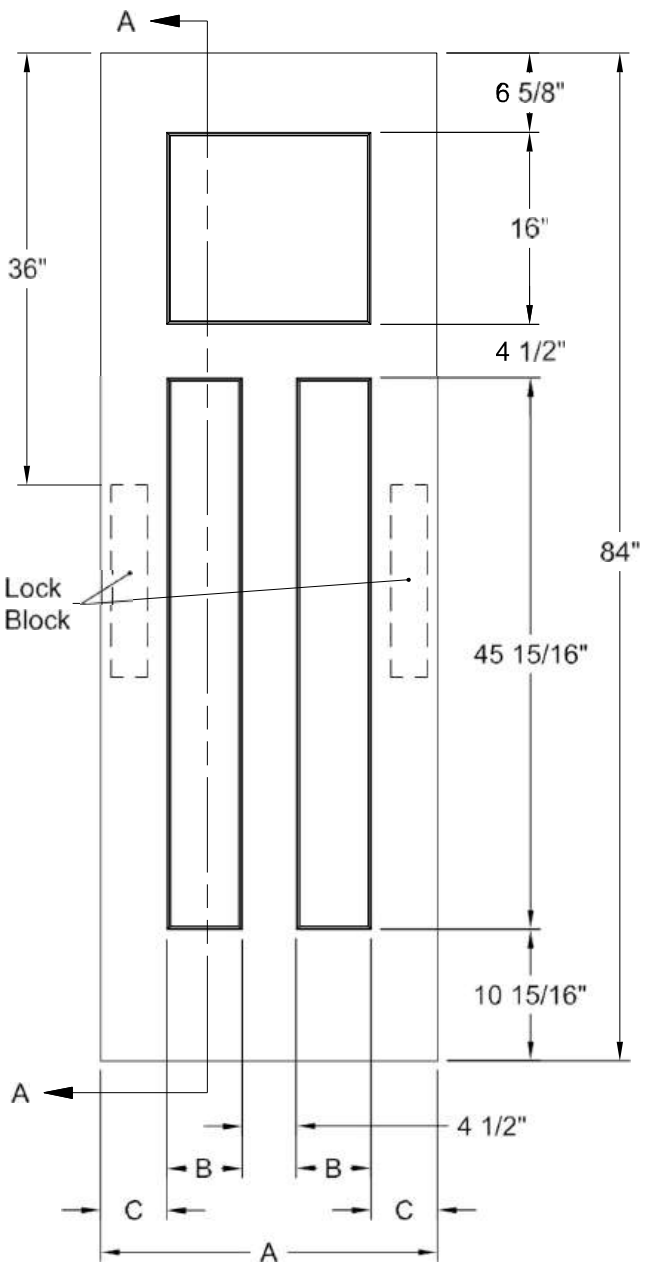

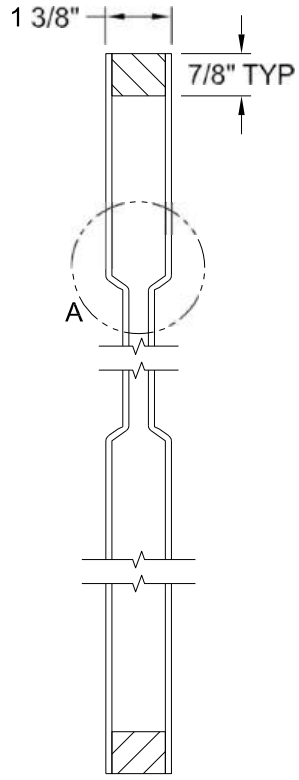

Section A-A

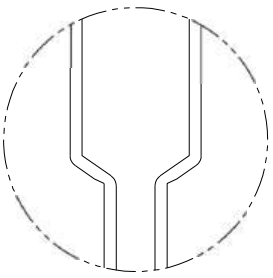

Detail A
Craftsman Sticking

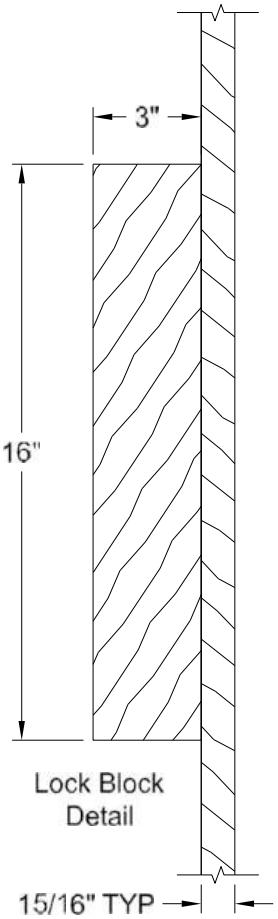

Lock Block
Detail

Dimension Table			
Door Size	A	B	C
3'-0" x 7'-0"	36"	10 1/4"	5 1/2"
2'-10" x 7'-0"	34"	10 1/4"	4 1/2"
2'-8" x 7'-0"	32"	8 1/4"	5 1/2"
2'-6" x 7'-0"	30"	8 1/4"	4 1/2"
2'-4" x 7'-0"	28"	6 1/4"	5 1/2"
2'-2" x 7'-0"	26"	6 1/4"	4 1/2"
2'-0" x 7'-0"	24"	5 1/4"	4 1/2"

CRAFTSMAN SMOOTH 7'-0"

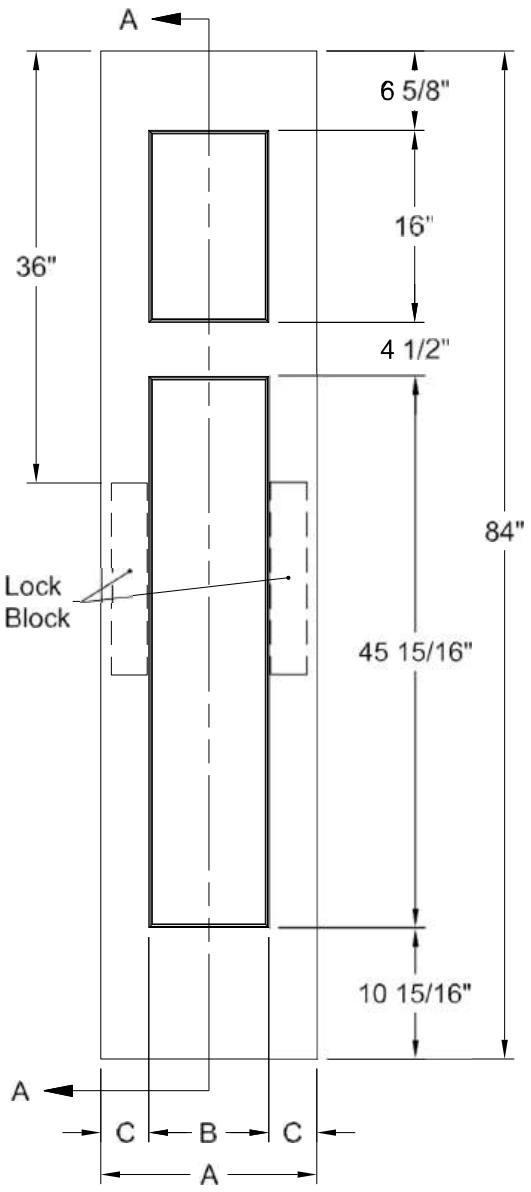

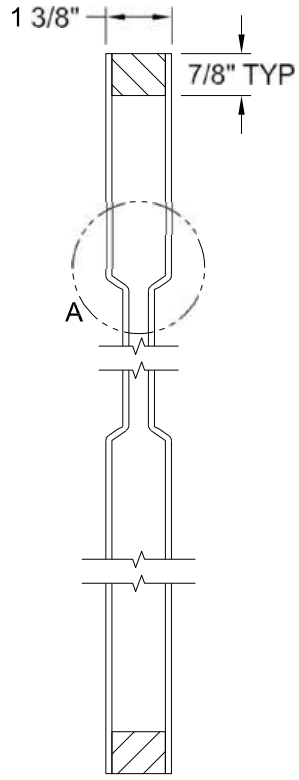

Section A-A

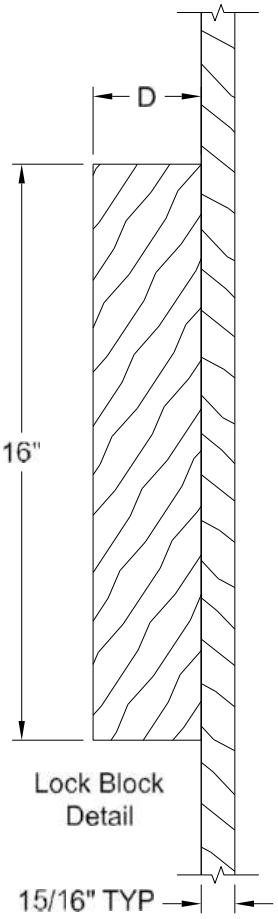

Lock Block
Detail

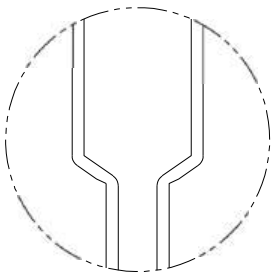

Detail A
Craftsman Sticking

Dimension Table				
Door Size	A	B	C	D
1'-10" x 7'-0"	22"	10"	6"	3"
1'-8" x 7'-0"	20"	10"	5"	3"
1'-6" x 7'-0"	18"	10"	4"	3"
1'-4" x 7'-0"	16"	8 1/4"	3 7/8"	2 11/16"
1'-3" x 7'-0"	15"	6"	4 1/2"	3"
1'-2" x 7'-0"	14"	6"	4"	3"
1'-0" x 7'-0"	12"	4"	4"	2 1/8"

CRAFTSMAN BIFOLD SMOOTH 7'-0"

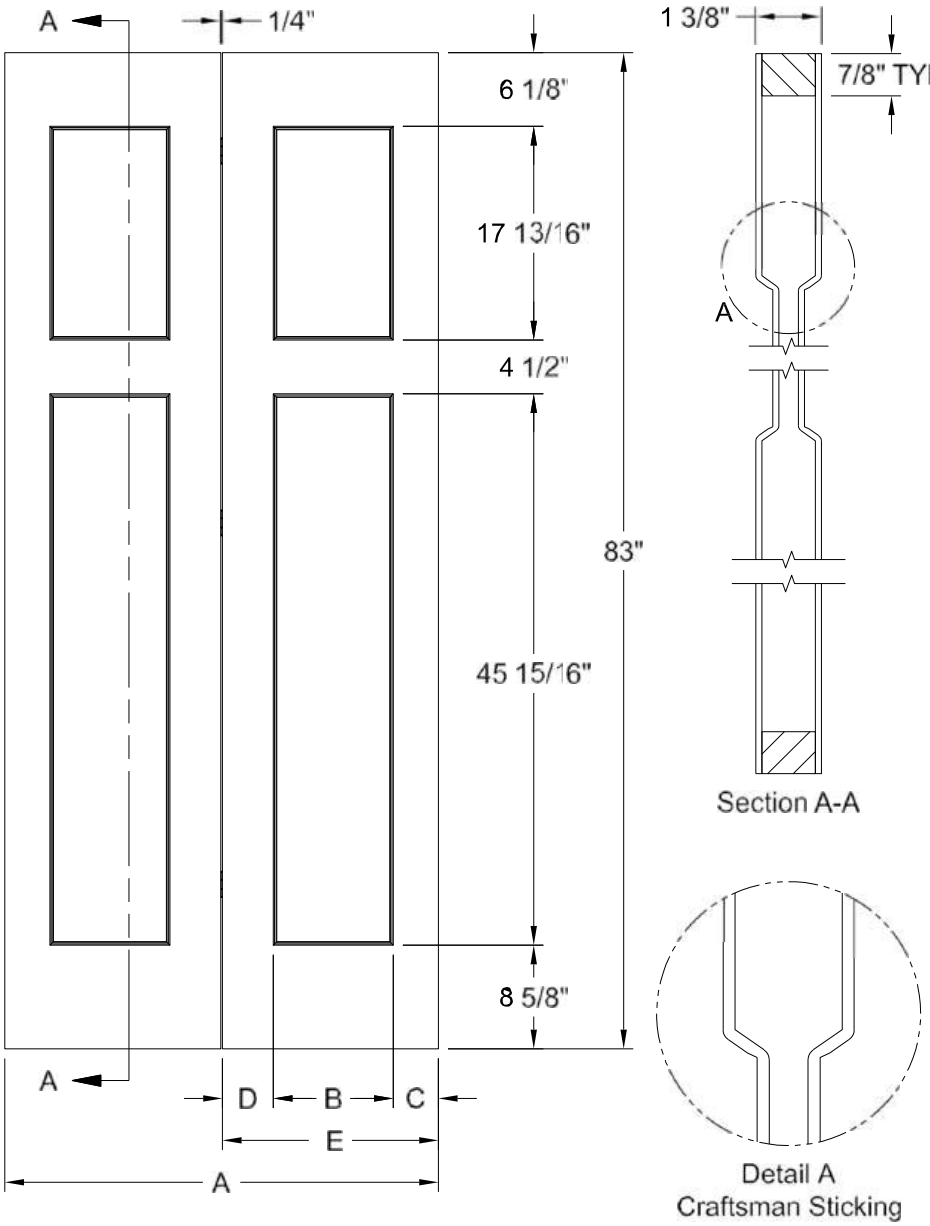

Dimension Table					
Door Size	A	B	C	D	E
3'-0" x 7'-0"	36"	10	4 1/4"	3 3/4"	17 7/8"
2'-10" x 7'-0"	34"	8 1/4"	4 1/2"	4 1/4"	16 7/8"
2'-8" x 7'-0"	32"	8 1/4"	4"	3 3/4"	15 7/8"

MADISON SMOOTH 6'-8"

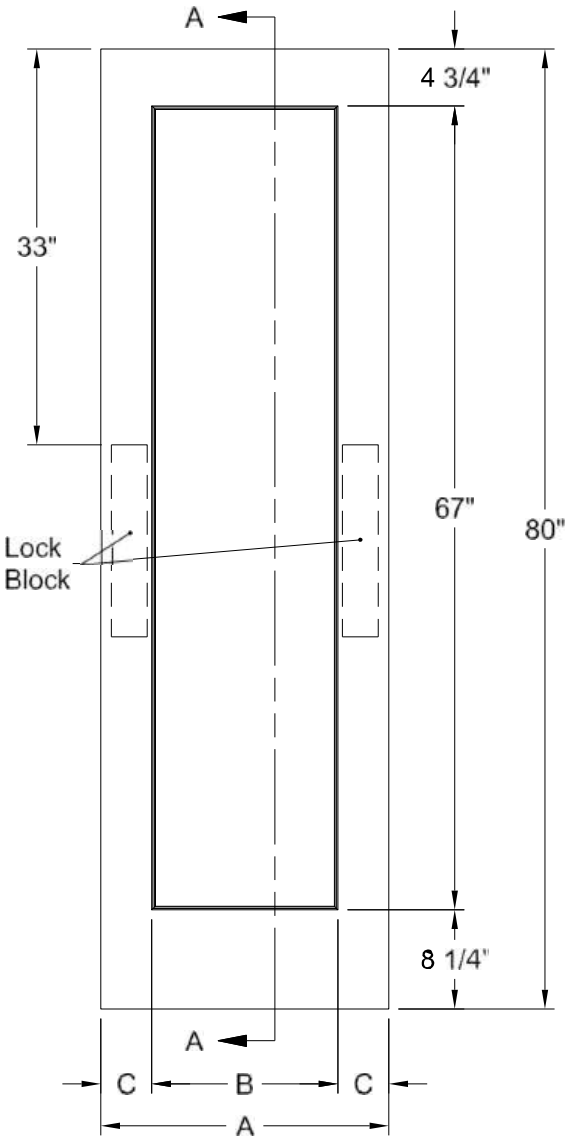

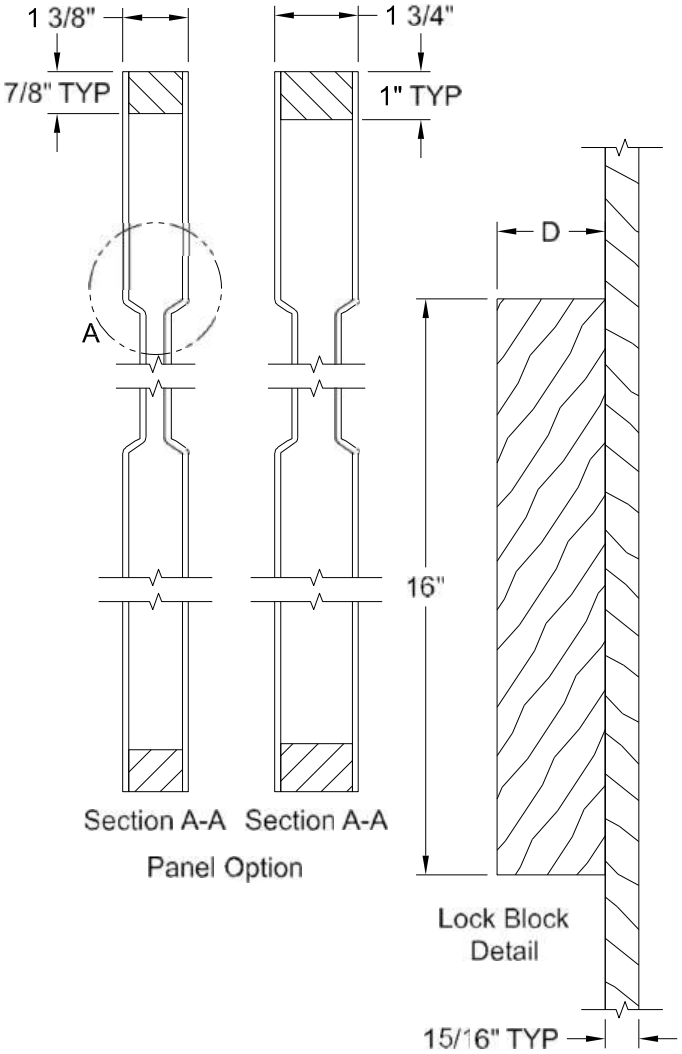

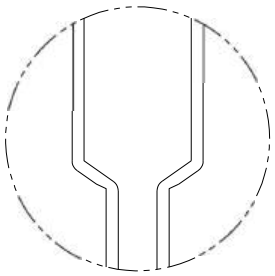

Detail A
Craftsman Sticking

Dimension Table

Door Size	A	B	C	D
3'-0" x 6'-8"	36"	26 1/2"	4 3/4"	3"
2'-10" x 6'-8"	34"	22 1/2"	5 3/4"	3"
2'-8" x 6'-8"	32"	22 1/2"	4 3/4"	3"
2'-6" x 6'-8"	30"	20 1/2"	4 3/4"	3"
2'-4" x 6'-8"	28"	18 1/2"	4 3/4"	3"
2'-2" x 6'-8"	26"	15 1/2"	5 1/4"	3"
2'-0" x 6'-8"	24"	15 1/2"	4 1/4"	3"
1'-10" x 6'-8"	22"	11 1/2"	5 1/4"	3"
1'-8" x 6'-8"	20"	11 1/2"	4 1/4"	3"
1'-6" x 6'-8"	18"	7 13/16"	5 3/32"	3"
1'-4" x 6'-8"	16"	7 13/16"	4 3/32"	3"
1'-3" x 6'-8"	15"	5 3/8"	4 13/16"	3"
1'-2" x 6'-8"	14"	5 3/8"	4 5/16"	3"
1'-0" x 6'-8"	12"	5 3/8"	3 5/16"	2 1/8"

MADISON BIFOLD SMOOTH 6'-8"

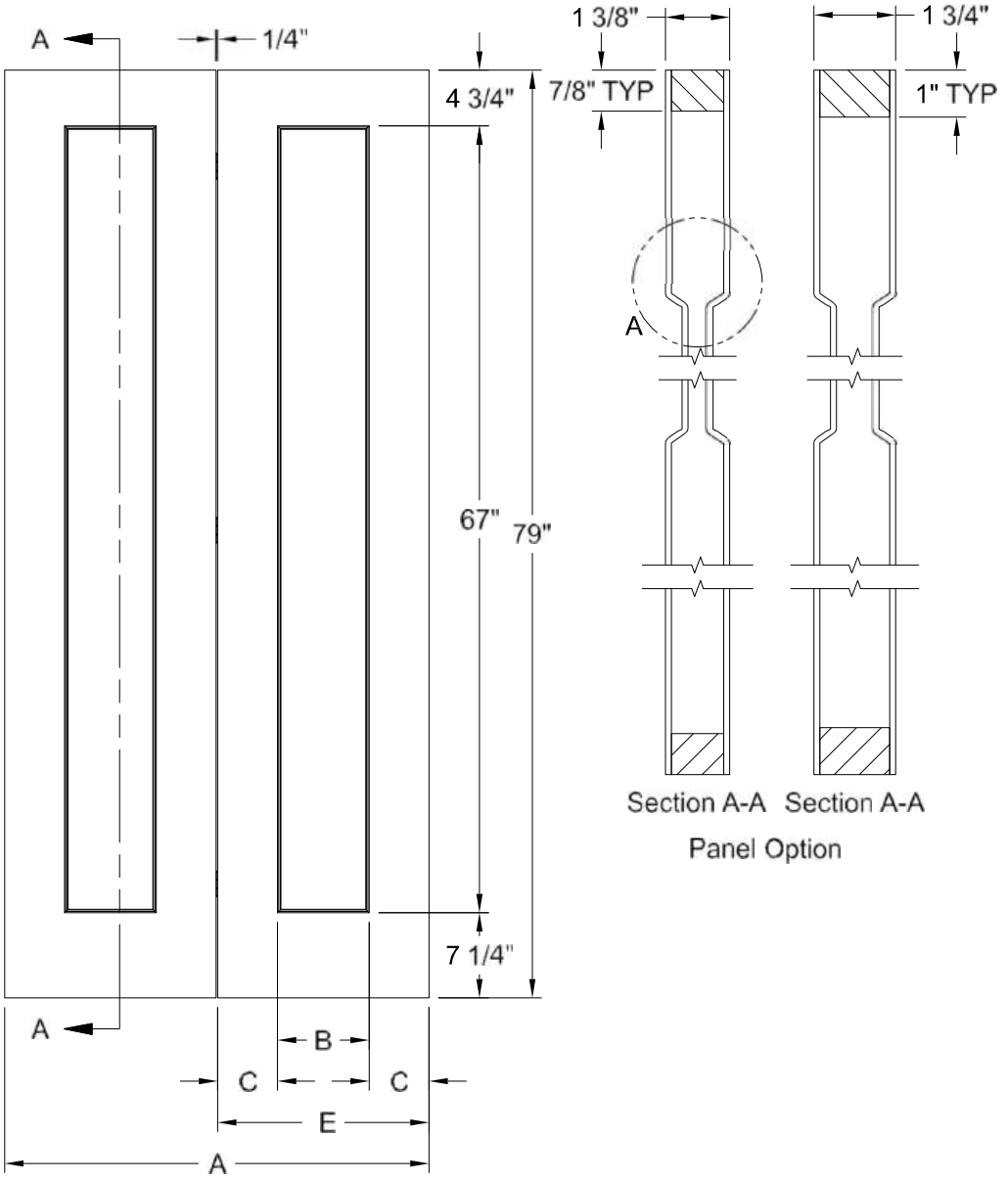

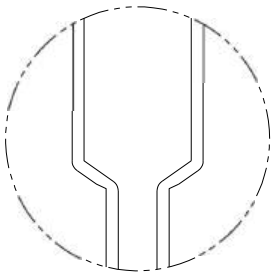

Detail A
Craftsman Sticking

Dimension Table				
Door Size	A	B	C	E
3'-0" x 6'-8"	36"	7 13/16"	5 1/32"	17 7/8"
2'-8" x 6'-8"	32"	7 13/16"	4 1/32"	15 7/8"
2'-6" x 6'-8"	30"	5 3/8"	4 3/4"	14 7/8"
2'-4" x 6'-8"	28"	5 3/8"	4 1/4"	13 7/8"
2'-0" x 6'-8"	24"	4 1/4"	3 13/16"	11 7/8"

MADISON SMOOTH 7'-0"

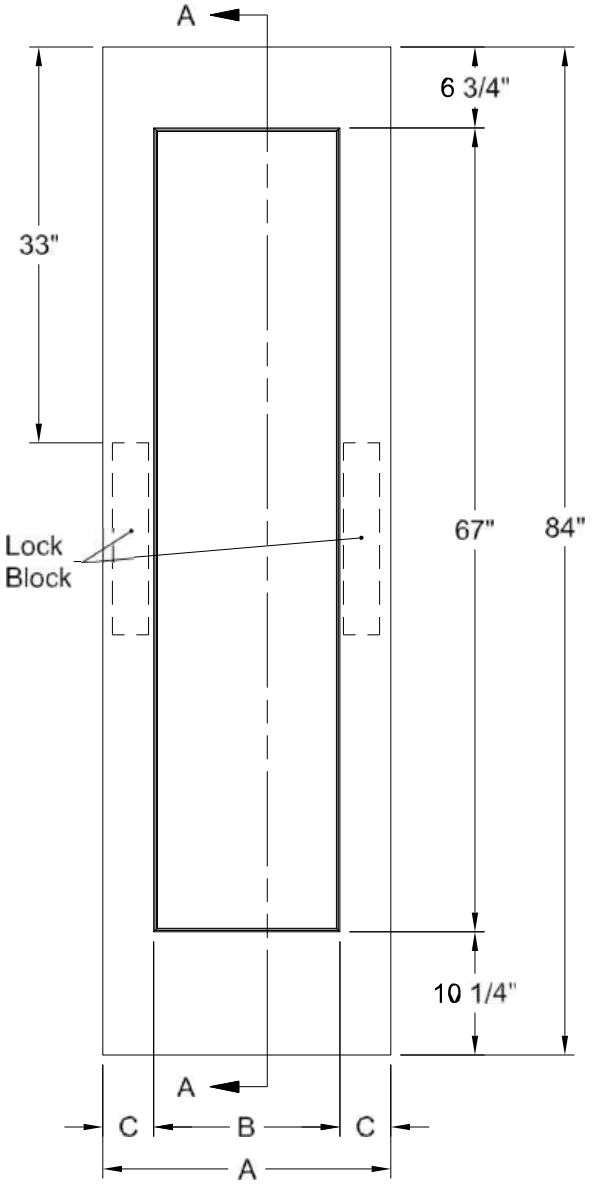

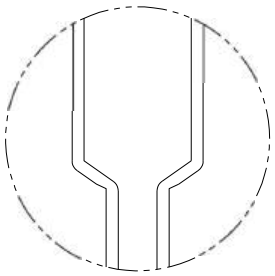

Detail A
Craftsman Sticking

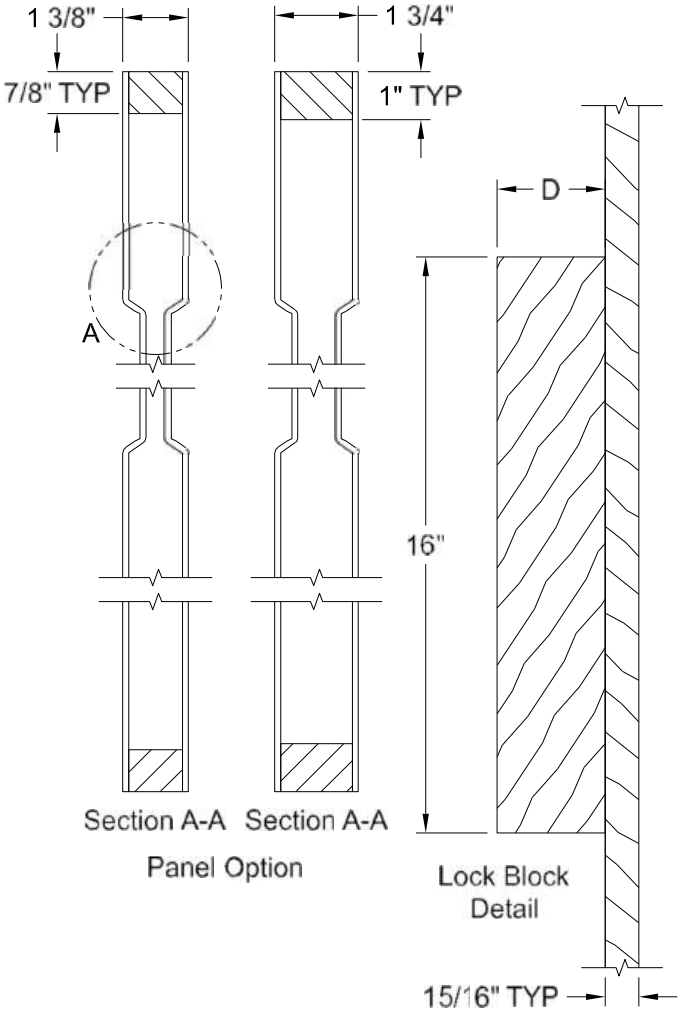

Dimension Table

Door Size	A	B	C	D
3'-0" x 7'-0"	36"	26 1/2"	4 3/4"	3"
2'-10" x 7'-0"	34"	22 1/2"	5 3/4"	3"
2'-8" x 7'-0"	32"	22 1/2"	4 3/4"	3"
2'-6" x 7'-0"	30"	20 1/2"	4 3/4"	3"
2'-4" x 7'-0"	28"	18 1/2"	4 3/4"	3"
2'-2" x 7'-0"	26"	15 1/2"	5 1/4"	3"
2'-0" x 7'-0"	24"	15 1/2"	4 1/4"	3"
1'-10" x 7'-0"	22"	11 1/2"	5 1/4"	3"
1'-8" x 7'-0"	20"	11 1/2"	4 1/4"	3"
1'-6" x 7'-0"	18"	7 13/16"	5 3/32"	3"
1'-4" x 7'-0"	16"	7 13/16"	4 3/32"	3"
1'-3" x 7'-0"	15"	5 3/8"	4 14/16"	3"
1'-2" x 7'-0"	14"	5 3/8"	4 5/16"	3"
1'-0" x 7'-0"	12"	5 3/8"	3 5/16"	2 1/8"

MADISON BIFOLD SMOOTH 7'-0"

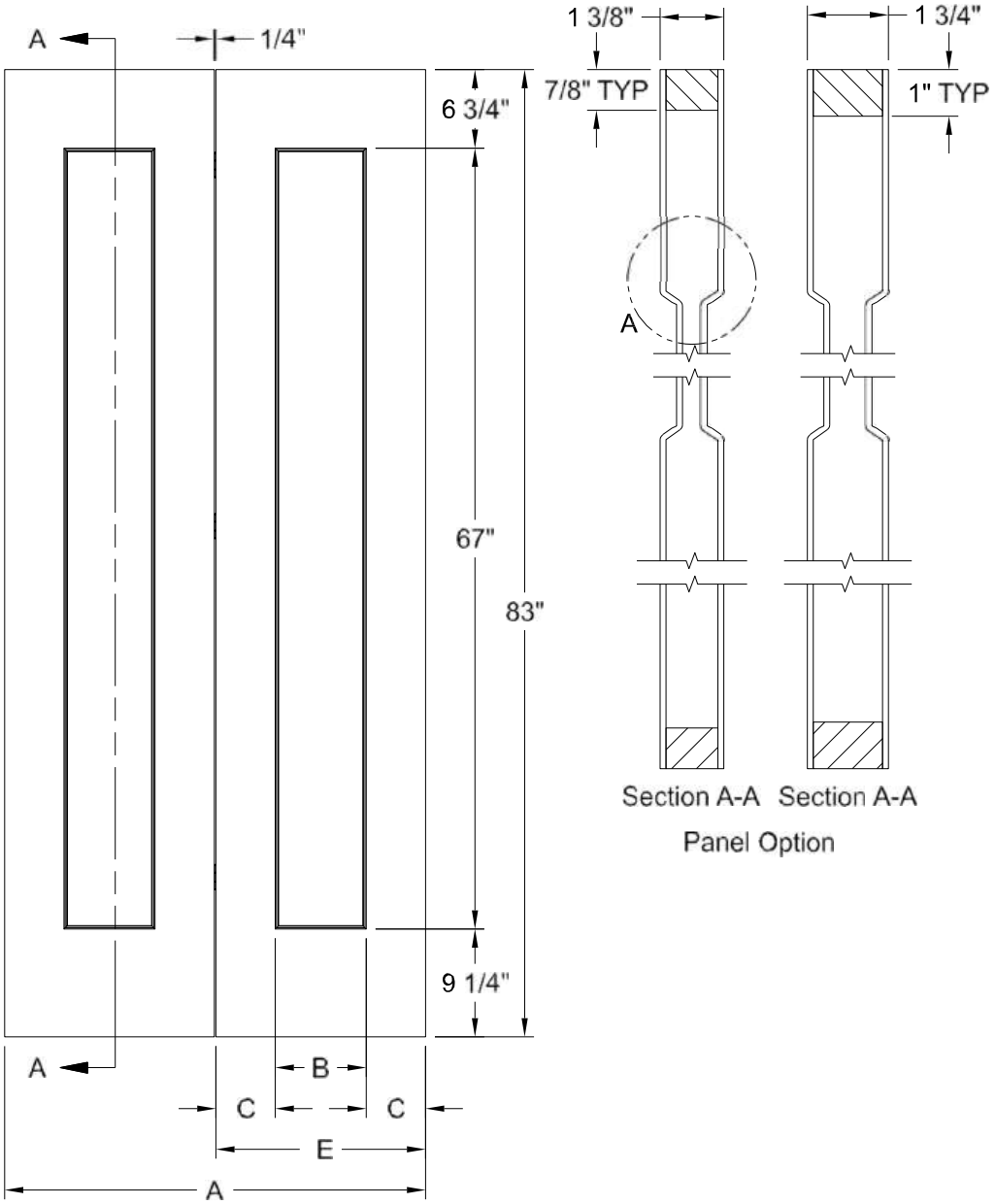

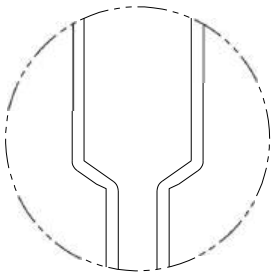

Detail A
Craftsman Sticking

Dimension Table

Door Size	A	B	C	E
3'-0" x 7'-0"	36"	7 13/16"	5 3/32"	17 7/8"
2'-8" x 7'-0"	32"	7 13/16"	4 3/32"	15 7/8"
3'-6" x 7'-0"	30"	5 3/8"	4 13/16"	14 7/8"
2'-4" x 7'-0"	28"	5 3/8"	4 5/16"	13 7/8"
2'-0" x 7'-0"	24"	4 1/4"	3 7/8"	11 7/8"

Product specifications may change without notice.
Questions? Consult JELD-WEN customer service.

MADISON SMOOTH 8'-0"

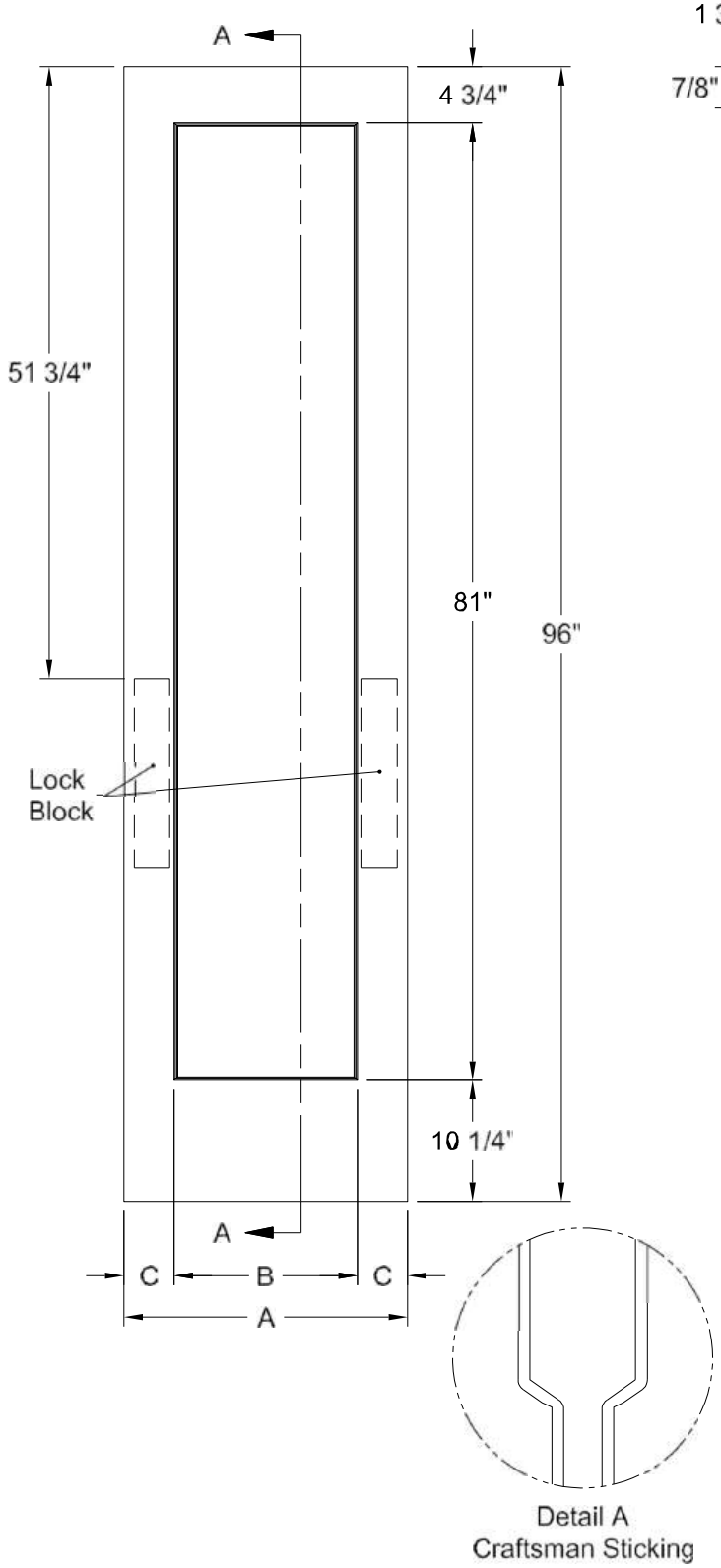

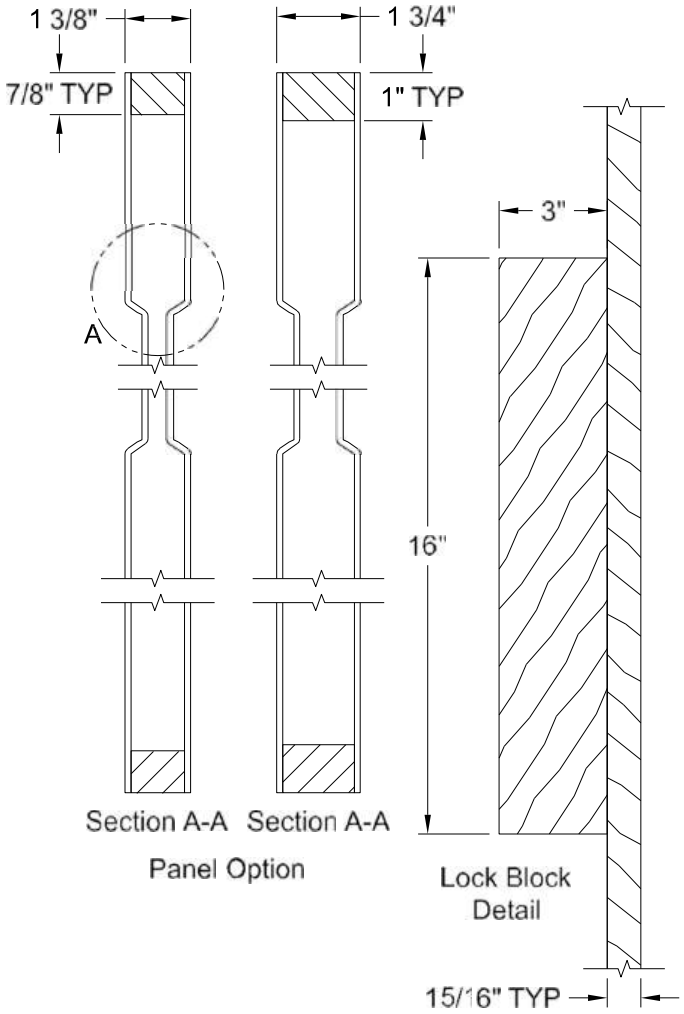

Detail A
Craftsman Sticking

Dimension Table			
Door Size	A	B	C
3'-0" x 8'-0"	36"	26 1/2"	4 3/4"
2'-10" x 8'-0"	34"	22 1/2"	5 3/4"
2'-8" x 8'-0"	32"	22 1/2"	4 3/4"
2'-6" x 8'-0"	30"	20 1/2"	4 3/4"
2'-4" x 8'-0"	28"	18 1/2"	4 3/4"
2'-2" x 8'-0"	26"	15 1/2"	5 1/4"
2'-0" x 8'-0"	24"	15 1/2"	4 1/4"
1'-10" x 8'-0"	22"	11 1/2"	5 1/4"
1'-8" x 8'-0"	20"	11 1/2"	4 1/4"
1'-6" x 8'-0"	18"	7 13/16"	5 3/32"
1'-4" x 8'-0"	16"	7 13/16"	4 3/32"

Product specifications may change without notice.
Questions? Consult JELD-WEN customer service.

MADISON BIFOLD SMOOTH 8'-0"

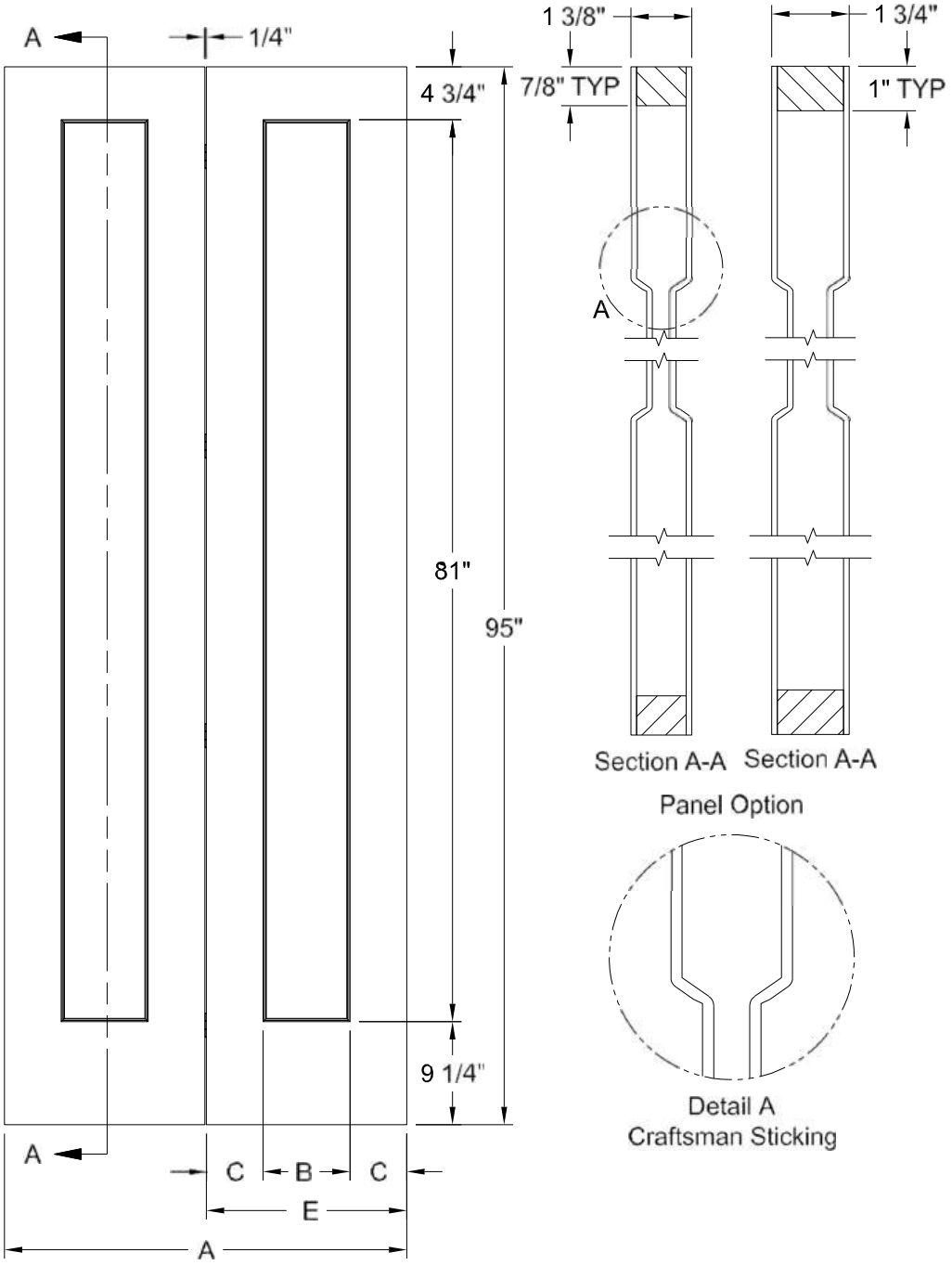

Dimension Table				
Door Size	A	B	C	E
3'-0" x 8'-0"	36"	7 13/16"	5 3/32"	17 7/8"
2'-8" x 8'-0"	32"	7 13/16"	4 3/32"	15 7/8"

MONROE SMOOTH 6'-8"

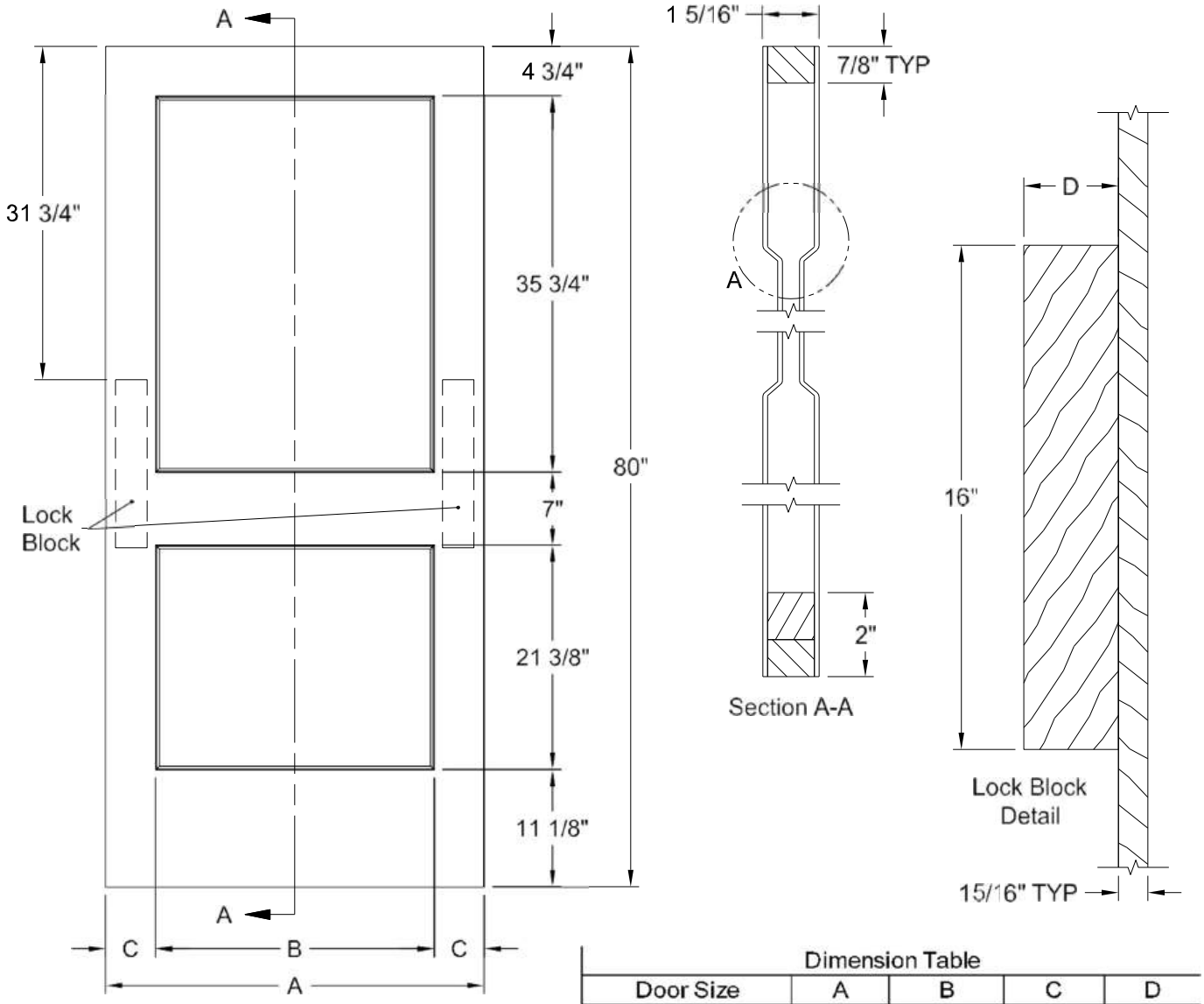

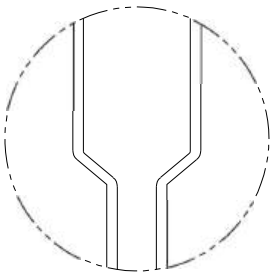

Detail A
Monroe Profile

Dimension Table

Door Size	A	B	C	D
3'-0" x 6'-8"	36"	26 1/2"	4 3/4"	3"
2'-10" x 6'-8"	34"	22 1/2"	5 3/4"	3"
2'-8" x 6'-8"	32"	22 1/2"	4 3/4"	3"
2'-6" x 6'-8"	30"	20 1/2"	4 3/4"	3"
2'-4" x 6'-8"	28"	18 1/2"	4 3/4"	3"
2'-2" x 6'-8"	26"	15 1/2"	5 1/4"	3"
2'-0" x 6'-8"	24"	15 1/2"	4 1/4"	3"
1'-10" x 6'-8"	22"	11 1/2"	5 1/4"	3"
1'-8" x 6'-8"	20"	11 1/2"	4 1/4"	3"
1'-6" x 6'-8"	18"	9 1/4"	4 3/8"	3"
1'-4" x 6'-8"	16"	9 1/4"	3 3/8"	2 1/8"
1'-3" x 6'-8"	15"	7 1/2"	3 3/4"	2 11/16"
1'-2" x 6'-8"	14"	7 1/2"	3 1/4"	2 1/8"
1'-0" x 6'-8"	12"	6"	3"	1 5/8"

MONROE BIFOLD SMOOTH 6'-8"

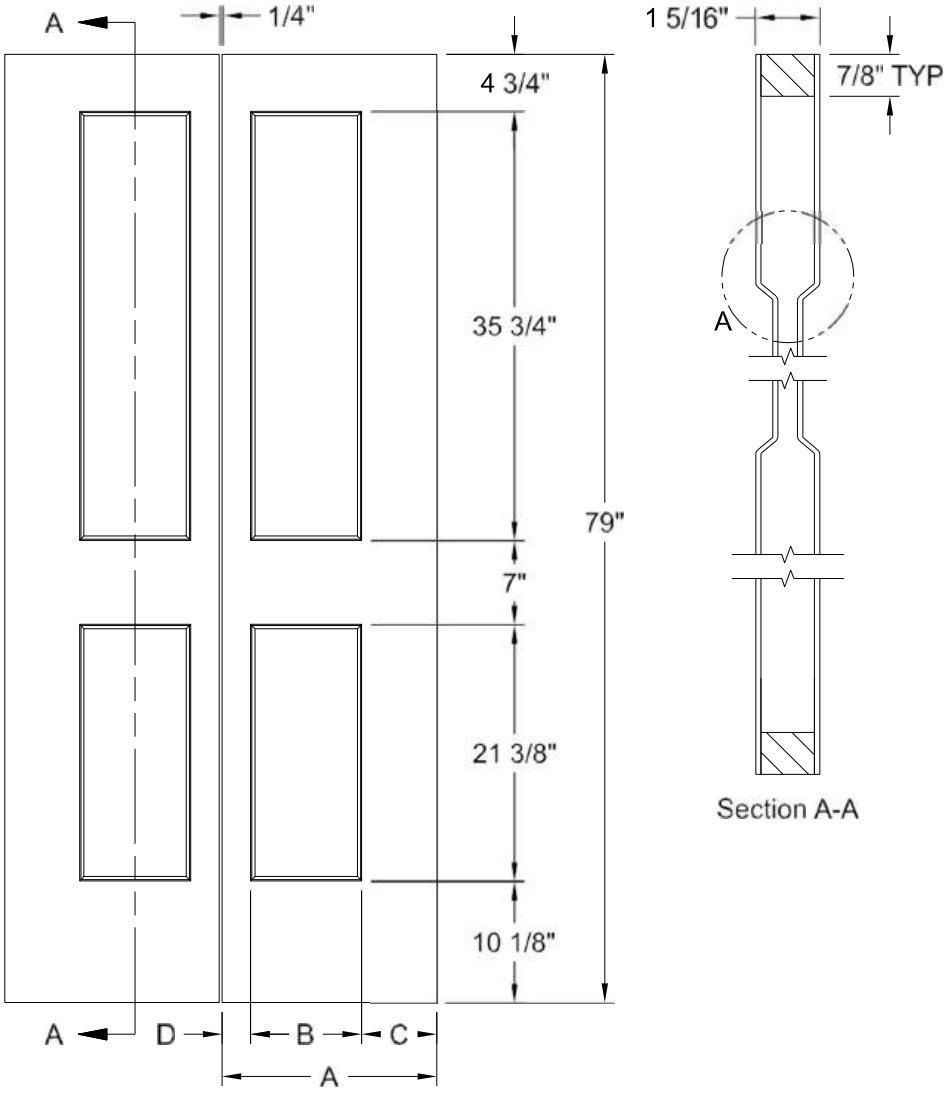

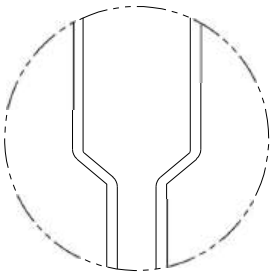

Detail A
Monroe Profile

Dimension Table				
Door Size	A	B	C	D
3'-0" x 6'-8"	17 7/8"	9 1/4"	6 1/4"	2 3/8"
2'-10" x 6'-8"	16 7/8"	9 1/4"	5 1/4"	2 3/8"
2'-8" x 6'-8"	15 7/8"	9 1/4"	4 1/4"	2 3/8"
2'-6" x 6'-8"	14 7/8"	7 1/2"	5 1/4"	2 1/8"
2'-4" x 6'-8"	13 7/8"	7 1/2"	4 1/4"	2 1/8"
2'-2" x 6'-8"	12 7/8"	7 1/2"	3 1/4"	2 1/8"
2'-0" x 6'-8"	11 7/8"	6"	4 1/4"	1 5/8"
1'-10" x 6'-8"	10 7/8"	6"	3 1/4"	1 5/8"

MONROE SMOOTH 7'-0"

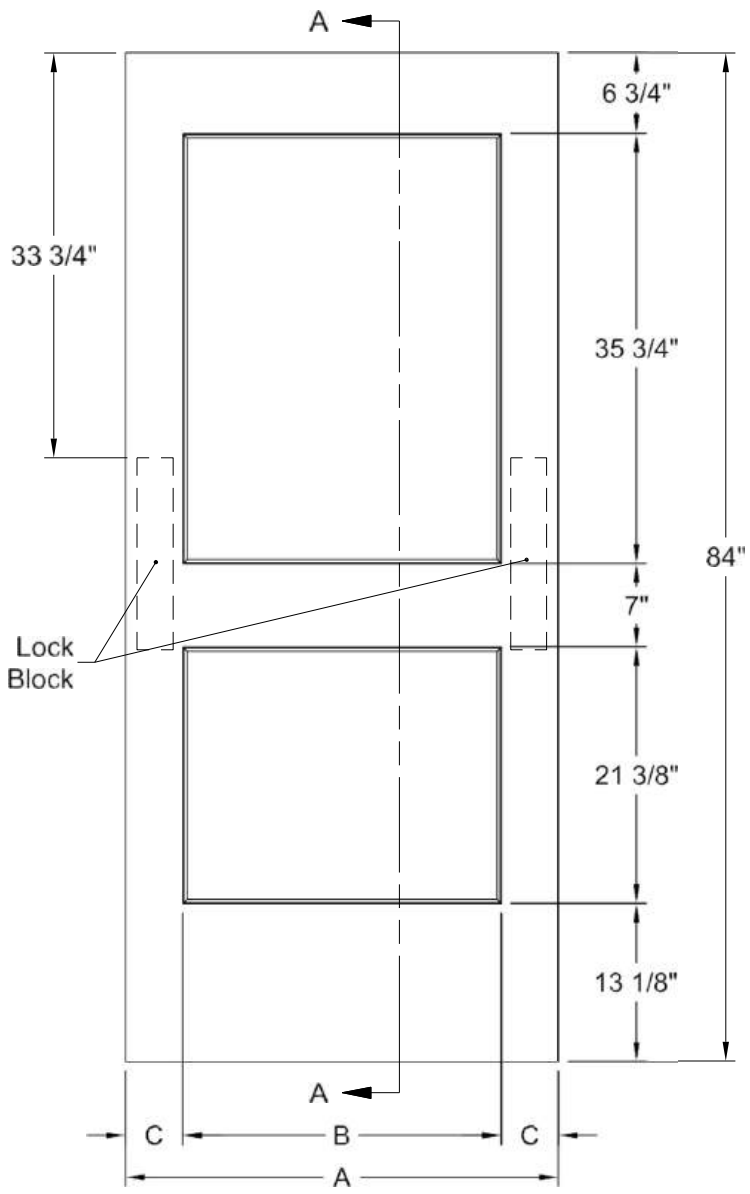

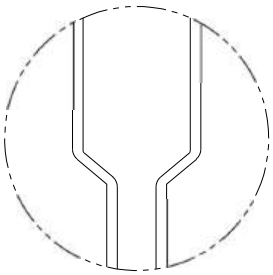

Detail A
Monroe Profile

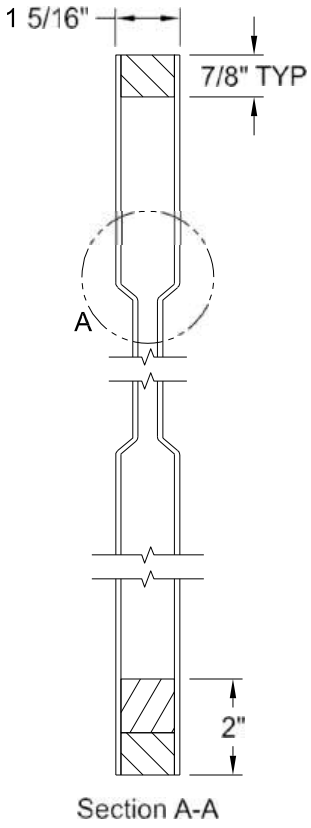

Section A-A

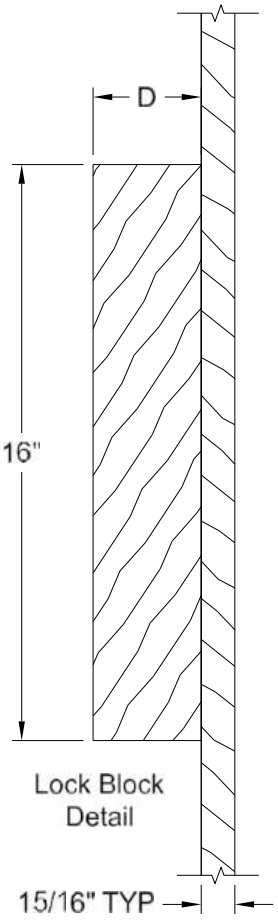

Lock Block
Detail

Dimension Table				
Door Size	A	B	C	D
3'-0" x 7'-0"	36"	26 1/2"	4 3/4"	3"
2'-10" x 7'-0"	34"	22 1/2"	5 3/4"	3"
2'-8" x 7'-0"	32"	22 1/2"	4 3/4"	3"
2'-6" x 7'-0"	30"	20 1/2"	4 3/4"	3"
2'-4" x 7'-0"	28"	18 1/2"	4 3/4"	3"
2'-2" x 7'-0"	26"	15 1/2"	5 1/4"	3"
2'-0" x 7'-0"	24"	15 1/2"	4 1/4"	3"
1'-10" x 7'-0"	22"	11 1/2"	5 1/4"	3"
1'-8" x 7'-0"	20"	11 1/2"	4 1/4"	3"
1'-6" x 7'-0"	18"	9 1/4"	4 3/8"	3"
1'-4" x 7'-0"	16"	9 1/4"	3 3/8"	2 1/8"
1'-3" x 7'-0"	15"	7 1/2"	3 3/4"	2 11/16"
1'-2" x 7'-0"	14"	7 1/2"	3 1/4"	2 1/8"
1'-0" x 7'-0"	12"	6"	3"	1 5/8"

MONROE BIFOLD SMOOTH 7'-0"

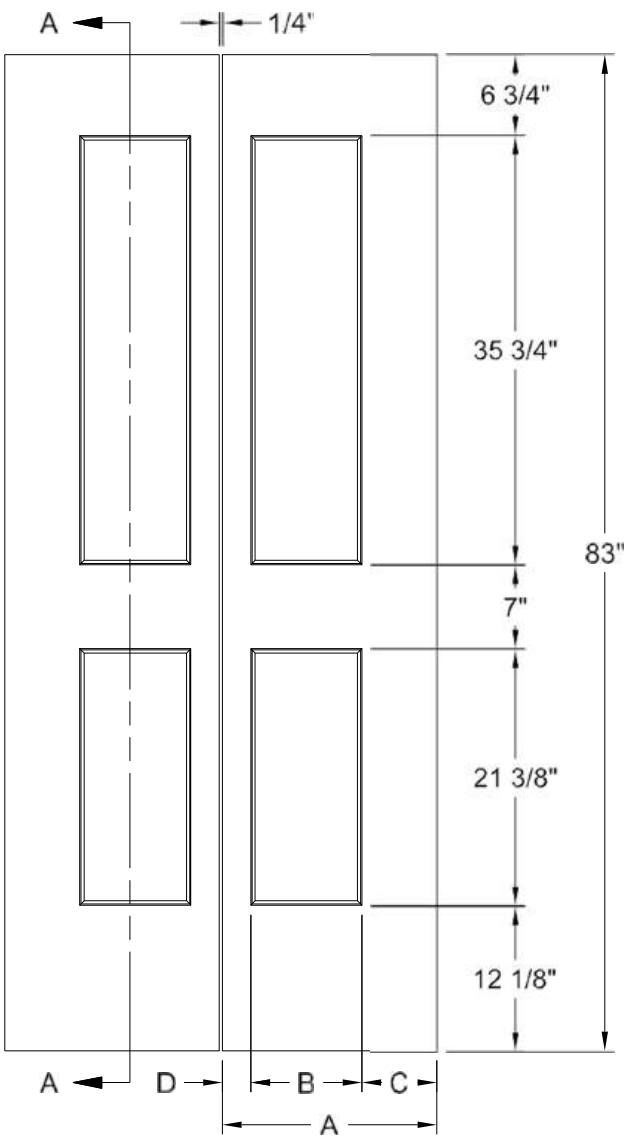

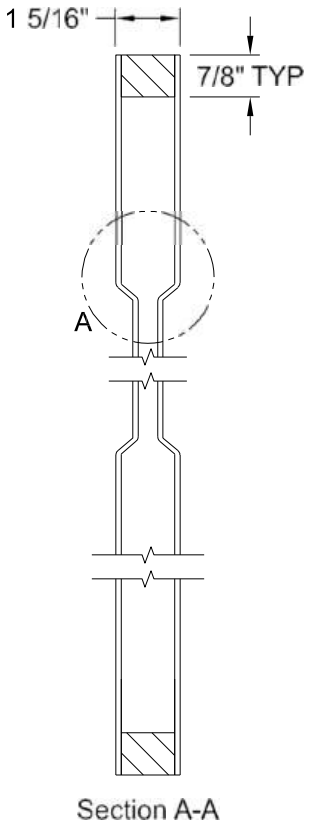

Section A-A

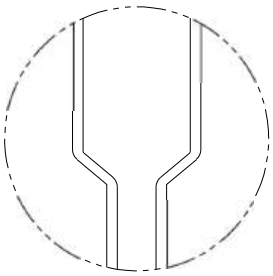

Detail A
Monroe Profile

Dimension Table

Door Size	A	B	C	D
3'-0" x 7'-0"	17 7/8"	9 1/4"	6 1/4"	2 3/8"
2'-10" x 7'-0"	16 7/8"	9 1/4"	5 1/4"	2 3/8"
2'-8" x 7'-0"	15 7/8"	9 1/4"	4 1/4"	2 3/8"
2'-6" x 7'-0"	14 7/8"	7 1/2"	5 1/4"	2 1/8"
2'-4" x 7'-0"	13 7/8"	7 1/2"	4 1/4"	2 1/8"
2'-2" x 7'-0"	12 7/8"	7 1/2"	3 1/4"	2 1/8"
2'-0" x 7'-0"	11 7/8"	6"	4 1/4"	1 5/8"
1'-10" x 7'-0"	10 7/8"	6"	3 1/4"	1 5/8"

MONROE SMOOTH 8'-0"

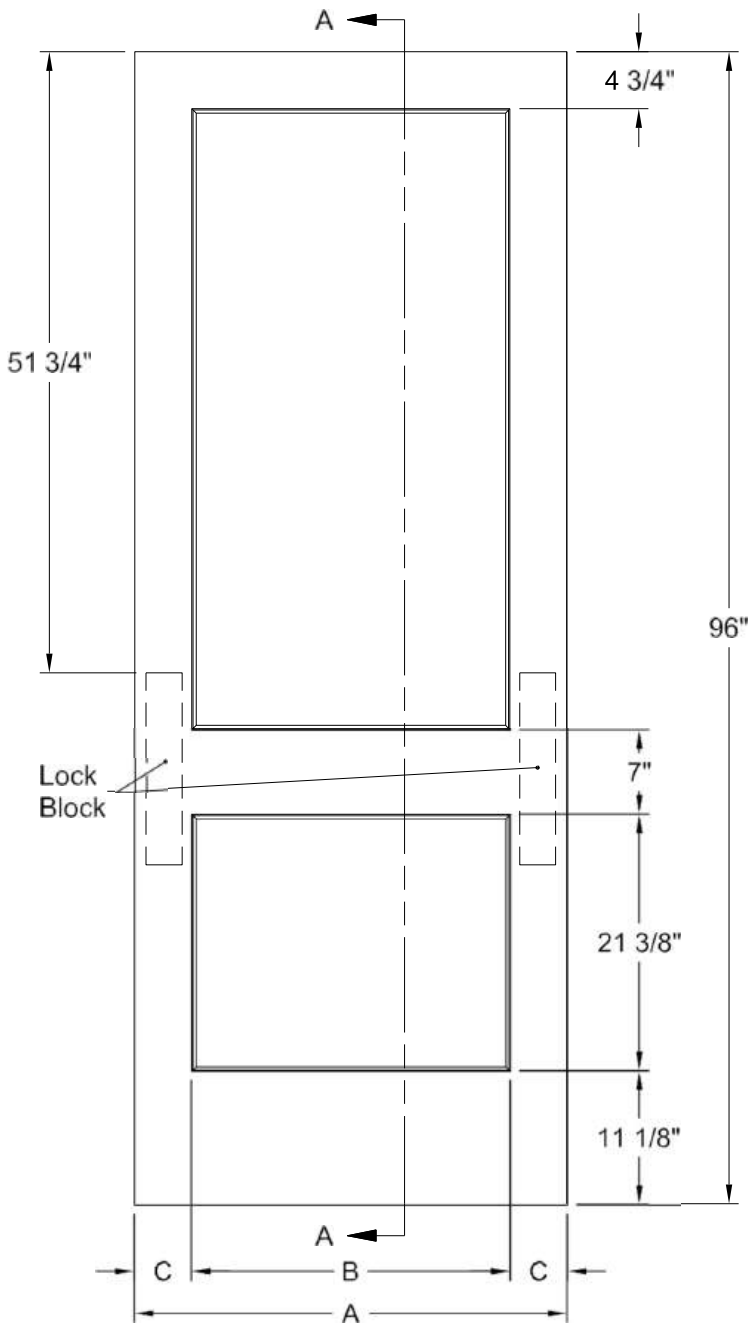

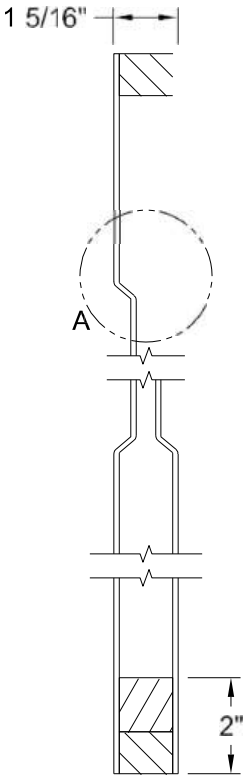

Section A-A

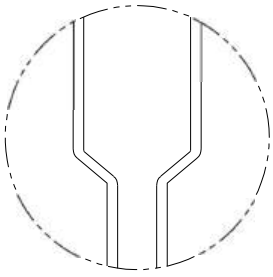

Detail A
Monroe Profile

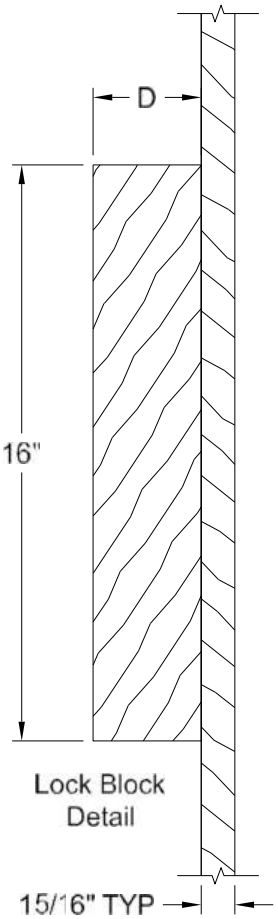

Lock Block
Detail

15/16" TYP

Dimension Table

Door Size	A	B	C	D
3'-0" x 8'-0"	36"	26 1/2"	4 3/4"	3"
2'-10" x 8'-0"	34"	22 1/2"	5 3/4"	3"
2'-8" x 8'-0"	32"	22 1/2"	4 3/4"	3"
2'-6" x 8'-0"	30"	20 1/2"	4 3/4"	3"
2'-4" x 8'-0"	28"	18 1/2"	4 3/4"	3"
2'-2" x 8'-0"	26"	15 1/2"	5 1/4"	3"
2'-0" x 8'-0"	24"	15 1/2"	4 1/4"	3"
1'-10" x 8'-0"	22"	11 1/2"	5 1/4"	3"
1'-8" x 8'-0"	20"	11 1/2"	4 1/4"	3"
1'-6" x 8'-0"	18"	9 1/4"	4 3/8"	3"
1'-4" x 8'-0"	16"	9 1/4"	3 3/8"	2 1/8"

MONROE BIFOLD SMOOTH 8'-0"

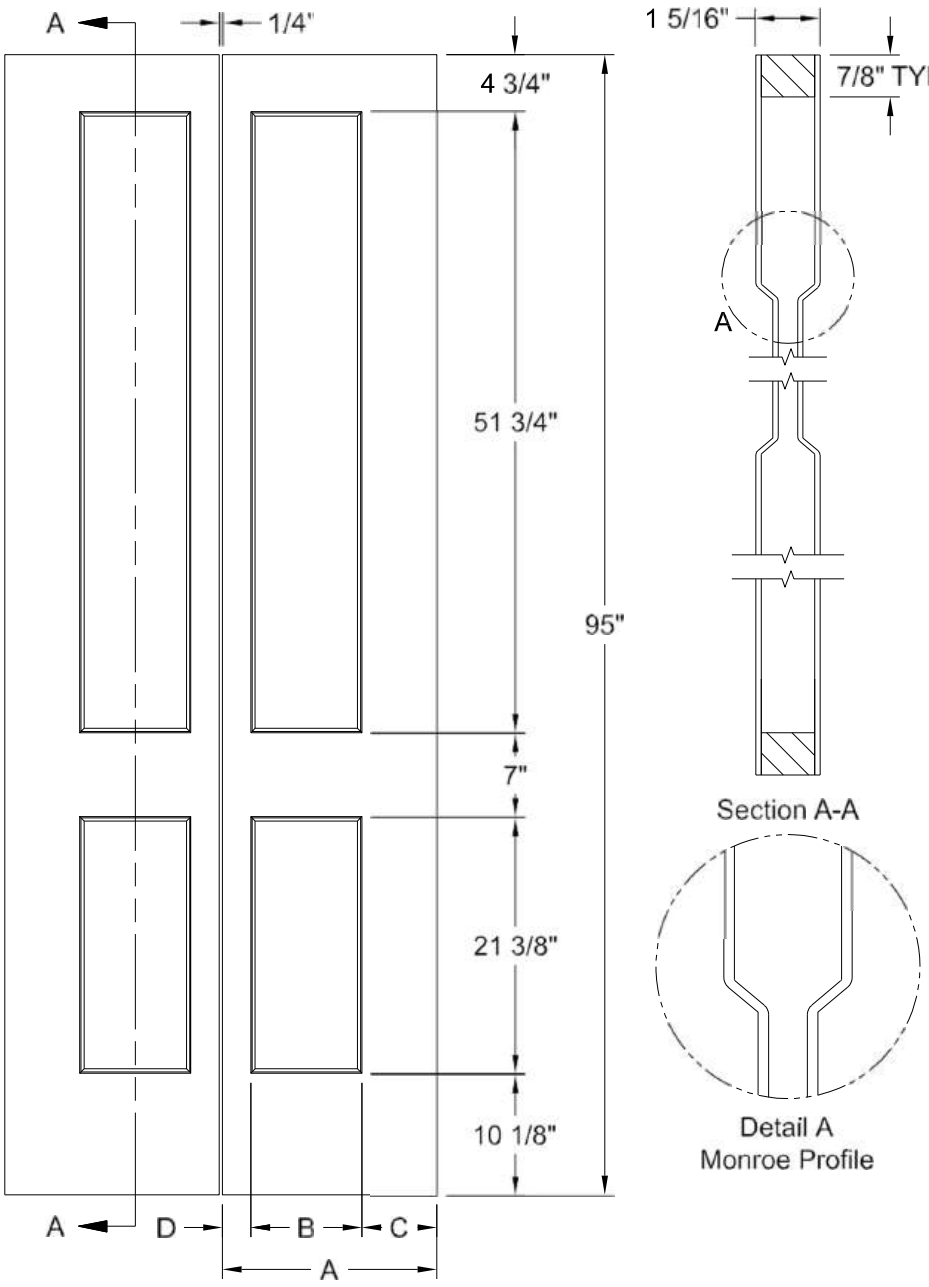

Dimension Table				
Door Size	A	B	C	D
3'-0" x 8'-0"	17 7/8"	9 1/4"	6 1/4"	2 3/8"
2'-10" x 8'-0"	16 7/8"	9 1/4"	5 1/4"	2 3/8"
2'-8" x 8'-0"	15 7/8"	9 1/4"	4 1/4"	2 3/8"

PRINCETON SMOOTH 6'-8"

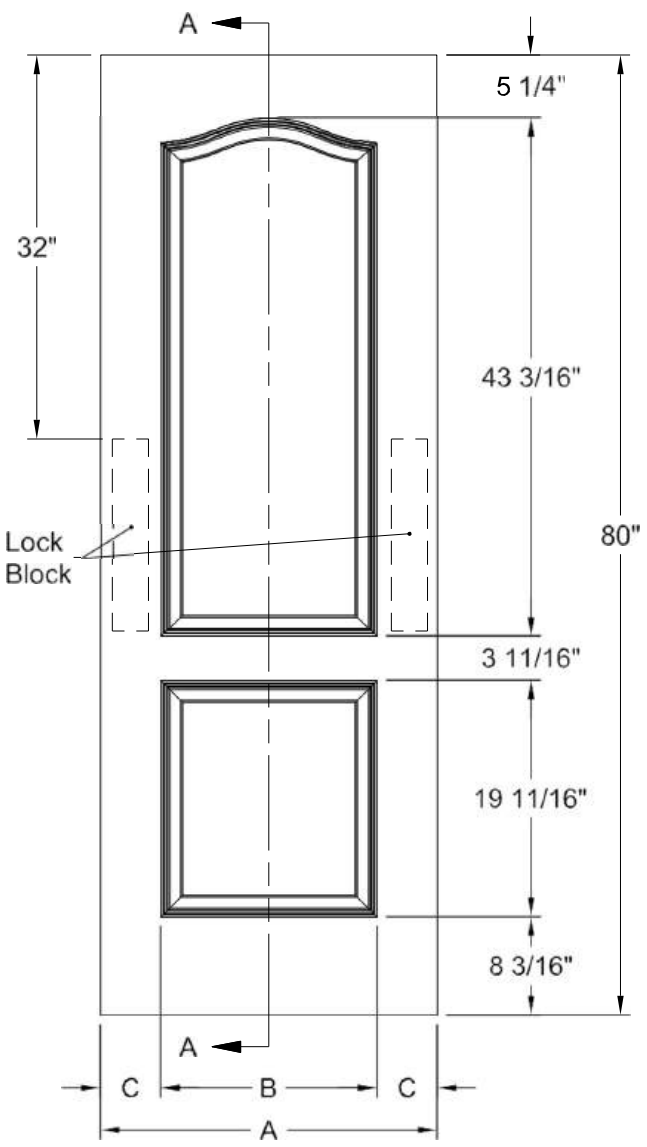

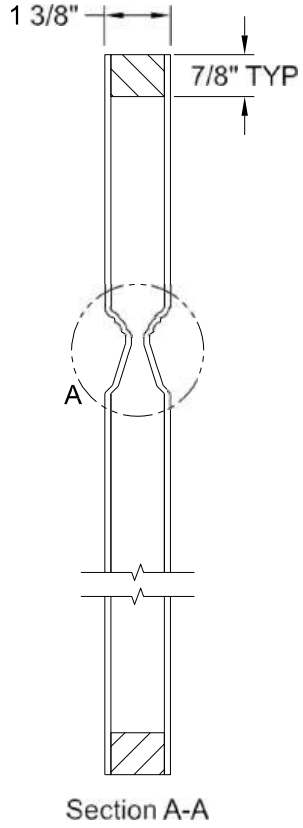

Section A-A

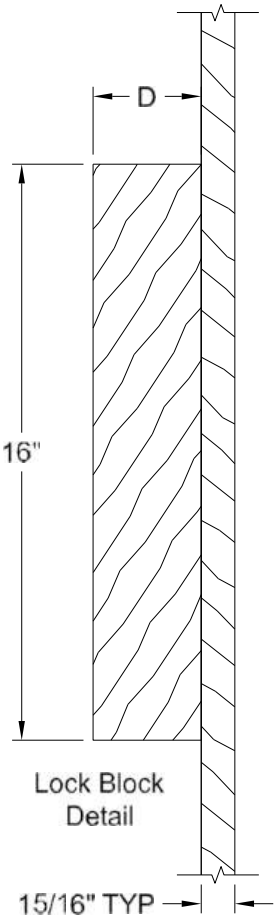

Lock Block
Detail

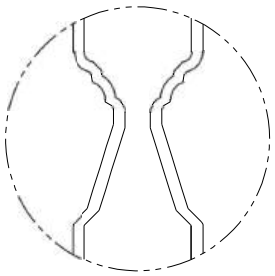

Detail A
Modified Cove &
Bead Sticking

Dimension Table				
Door Size	A	B	C	D
3'-0" x 6'-8"	36"	25 1/16"	5 15/32"	3"
2'-10" x 6'-8"	34"	22 7/8"	5 9/16"	3"
2'-8" x 6'-8"	32"	22 7/8"	4 9/16"	3"
2'-6" x 6'-8"	30"	19 3/4"	5 1/8"	3"
2'-4" x 6'-8"	28"	18 3/16"	4 29/32"	3"
2'-2" x 6'-8"	26"	18 3/16"	3 29/32"	2 11/16"
2'-0" x 6'-8"	24"	15"	4 1/2"	3"
1'-10" x 6'-8"	22"	15"	3 1/2"	2 1/8"
1'-8" x 6'-8"	20"	9 1/2"	5 1/4"	3"
1'-6" x 6'-8"	18"	9 1/2"	4 1/4"	3"
1'-4" x 6'-8"	16"	8 9/16"	3 23/32"	2 1/8"
1'-3" x 6'-8"	15"	8 9/16"	3 7/32"	2 1/8"
1'-2" x 6'-8"	14"	6 11/16"	3 21/32"	1 5/8"
1'-0" x 6'-8"	12"	6 11/16"	2 21/32"	1 3/8"

PRINCETON BIFOLD SMOOTH 6'-8"

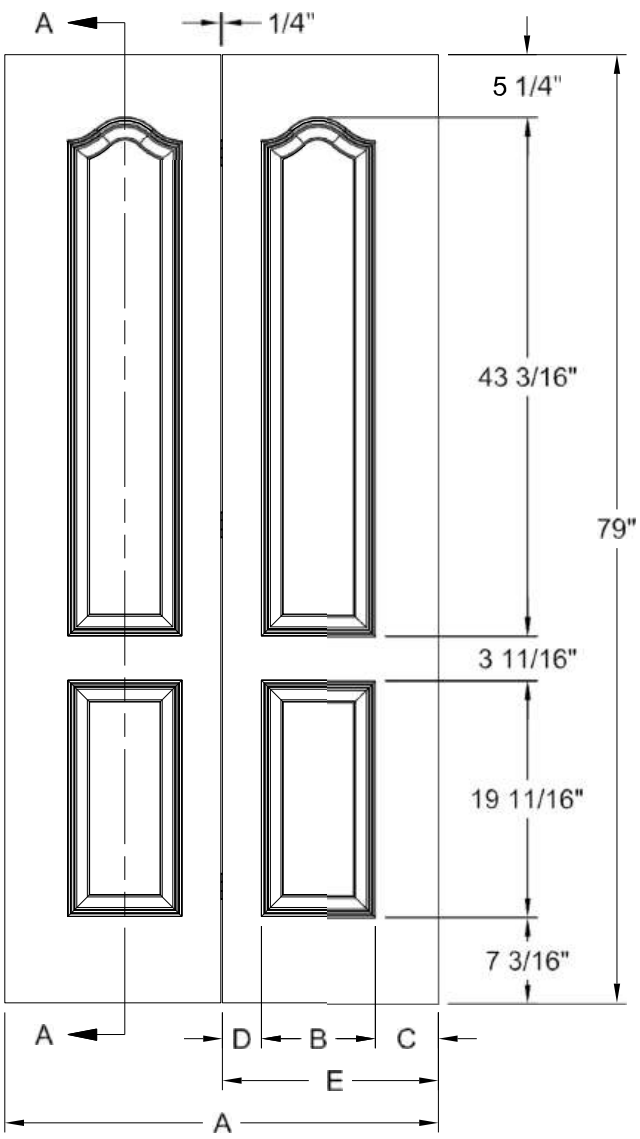

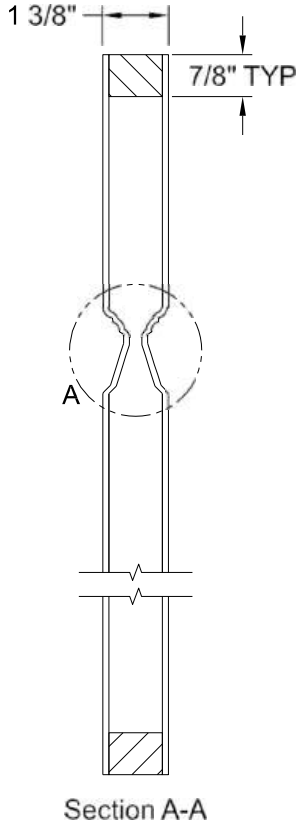

Section A-A

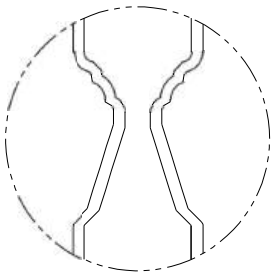

Detail A
Modified Cove &
Bead Sticking

Dimension Table

Door Size	A	B	C	D	E
3'-0" x 6'-8"	36"	9 1/2"	5 1/4"	3 1/4"	17 7/8"
2'-8" x 6'-8"	32"	8 1/2"	5 1/4"	2 1/4"	15 7/8"
2'-6" x 6'-8"	30"	8 1/2"	4 1/4"	2 1/4"	17 7/8"
2'-4" x 6'-8"	28"	6 5/8"	4 1/2"	2 7/8"	13 7/8"
2'-0" x 6'-8"	24"	6 5/8"	3 1/2"	1 7/8"	11 7/8"

PRINCETON SMOOTH 7'-0"

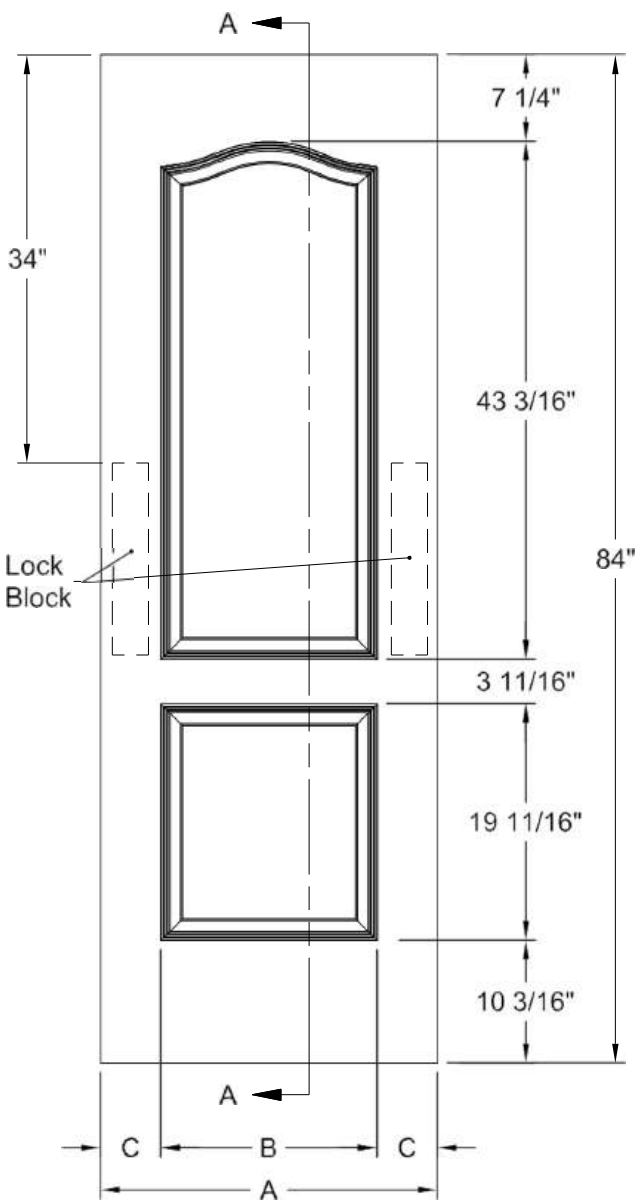

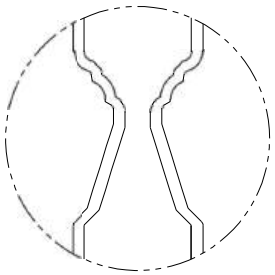

Detail A
Modified Cove &
Bead Sticking

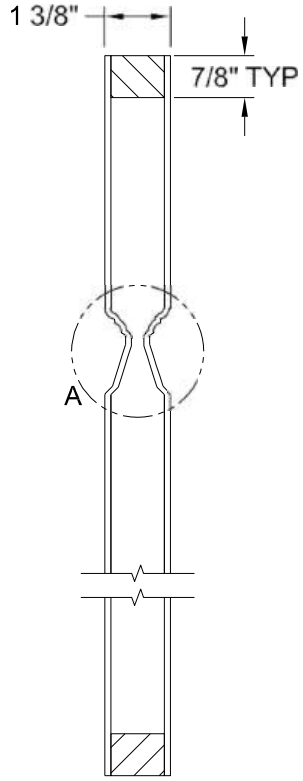

Section A-A

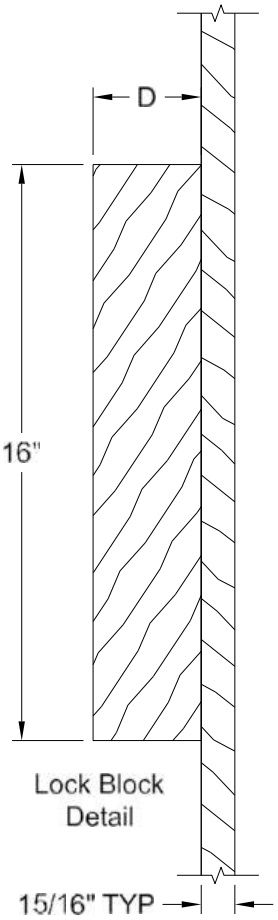

Lock Block
Detail

Dimension Table

Door Size	A	B	C	D
3'-0" x 7'-0"	36"	25 1/16"	5 15/32"	3"
2'-10" x 7'-0"	34"	22 7/8"	5 9/16"	3"
2'-8" x 7'-0"	32"	22 7/8"	4 9/16"	3"
2'-6" x 7'-0"	30"	19 3/4"	5 1/8"	3"
2'-4" x 7'-0"	28"	18 3/16"	4 29/32"	3"
2'-2" x 7'-0"	26"	18 3/16"	3 29/32"	2 11/16"
2'-0" x 7'-0"	24"	15"	4 1/2"	3"
1'-10" x 7'-0"	22"	15"	3 1/2"	2 1/8"
1'-8" x 7'-0"	20"	9 1/2"	5 1/4"	3"
1'-6" x 7'-0"	18"	9 1/2"	4 1/4"	3"
1'-4" x 7'-0"	16"	8 9/16"	3 23/32"	2 1/8"
1'-3" x 7'-0"	15"	8 9/16"	3 7/32"	2 1/8"
1'-2" x 7'-0"	14"	6 11/16"	3 21/32"	1 5/8"
1'-0" x 7'-0"	12"	6 11/16"	2 21/32"	1 3/8"

PRINCETON BIFOLD SMOOTH 7'-0"

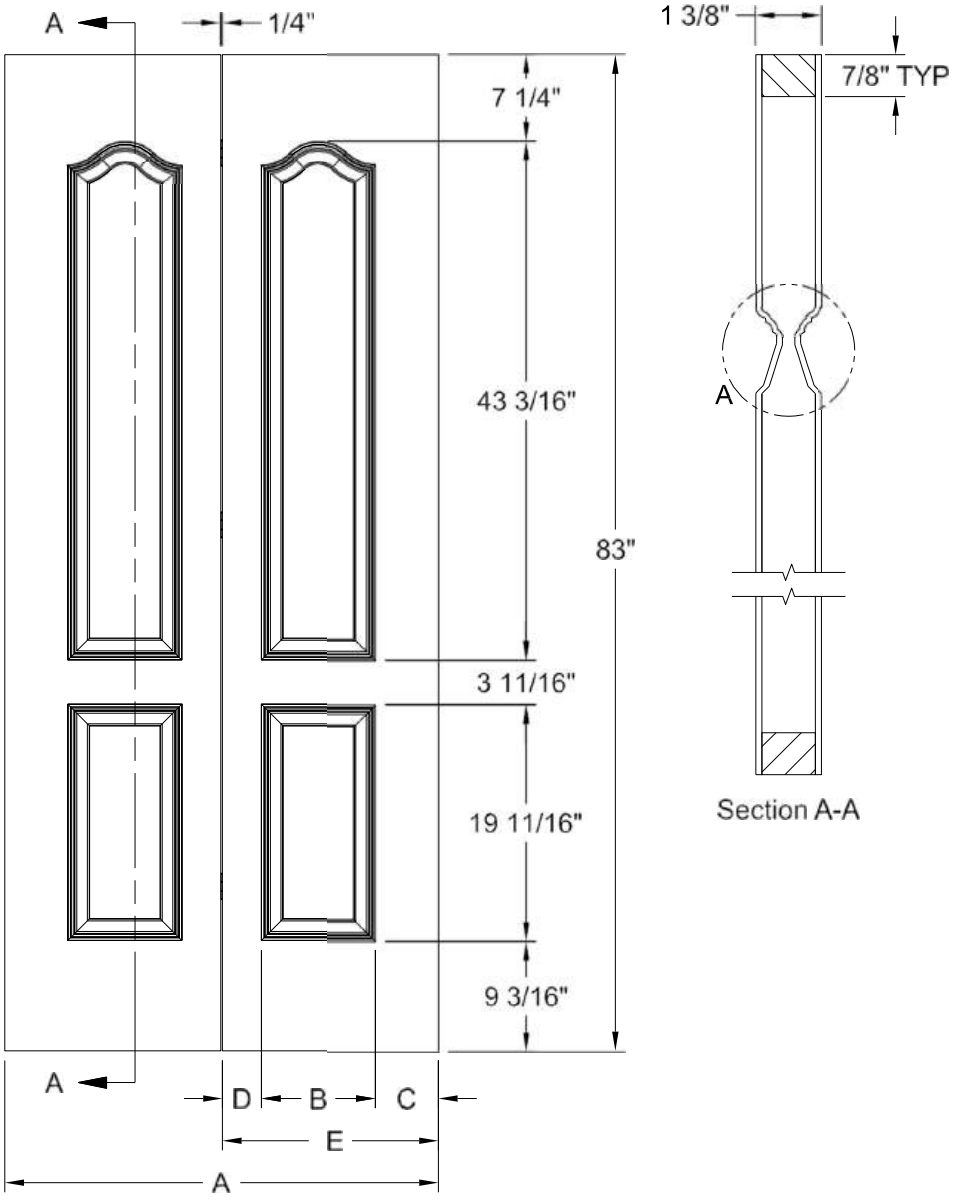

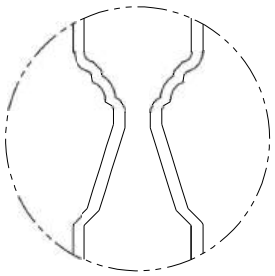

Detail A
Modified Cove &
Bead Sticking

Dimension Table

Door Size	A	B	C	D	E
3'-0" x 7'-0"	36"	9 1/2"	5 1/4"	3 1/4"	17 7/8"
2'-8" x 7'-0"	32"	8 1/2"	5 1/4"	2 1/4"	15 7/8"
2'-6" x 7'-0"	30"	8 1/2"	4 1/4"	2 1/4"	17 7/8"
2'-4" x 7'-0"	28"	6 5/8"	4 1/2"	2 7/8"	13 7/8"
2'-0" x 7'-0"	24"	6 5/8"	3 1/2"	1 7/8"	11 7/8"

PRINCETON SMOOTH 8'-0"

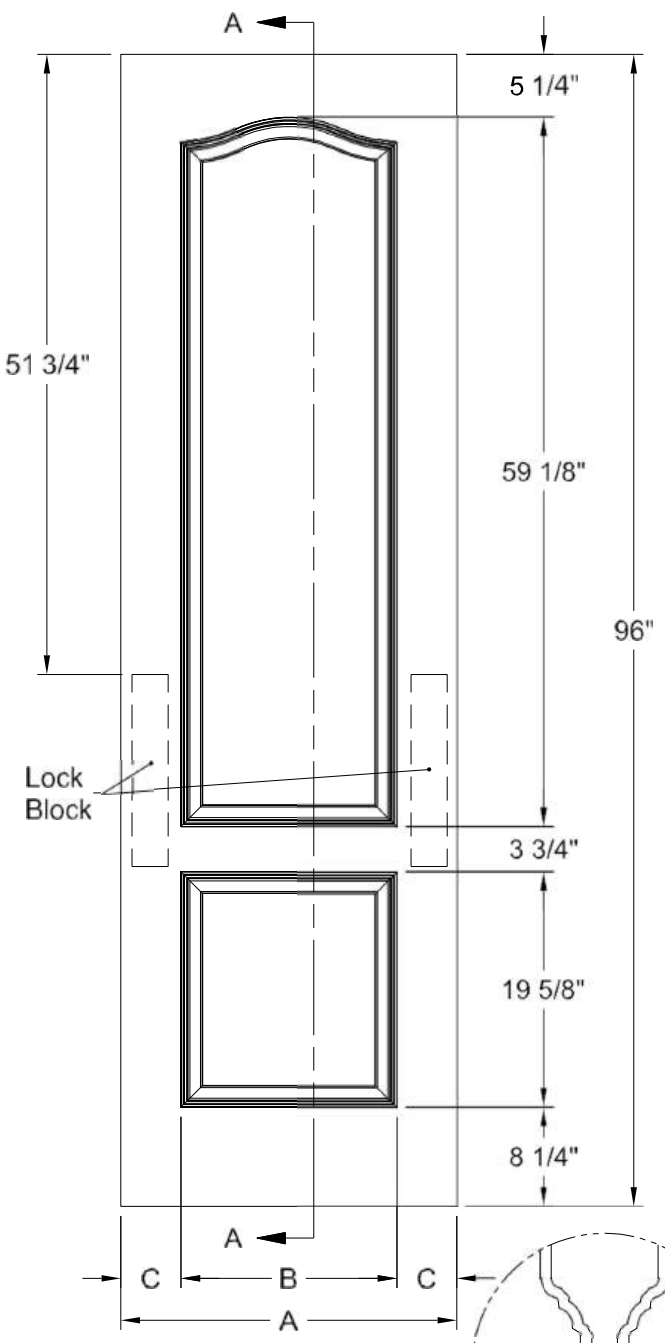

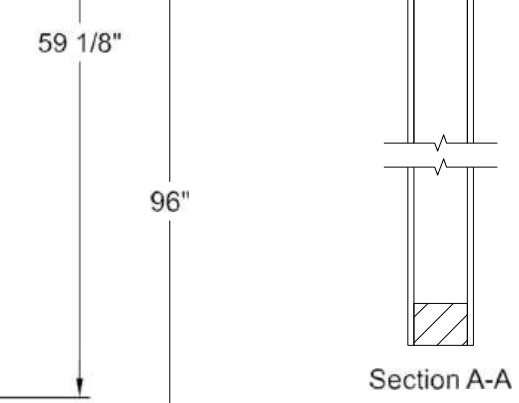

Section A-A

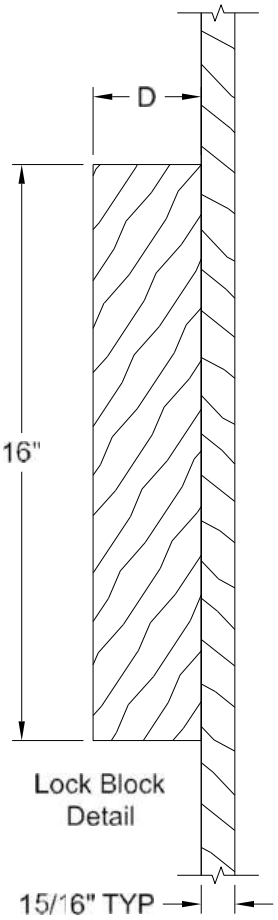

Lock Block
Detail

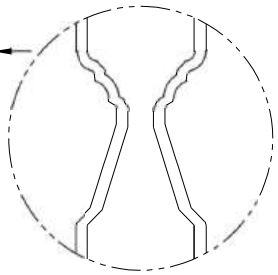

Detail A
Modified Cove &
Bead Sticking

Dimension Table				
Door Size	A	B	C	D
3'-0" x 8'-0"	36"	25"	5 1/2"	3"
2'-10" x 8'-0"	34"	25"	4 1/2"	3"
2'-8" x 8'-0"	32"	22 13/16"	4 19/32"	3"
2'-6" x 8'-0"	30"	19 11/16"	5 5/32"	3"
2'-4" x 8'-0"	28"	18 1/8"	4 15/16"	3"
2'-2" x 8'-0"	26"	18 1/8"	3 15/16"	2 11/16"
2'-0" x 8'-0"	24"	14 15/16"	4 17/32"	3"
1'-10" x 8'-0"	22"	14 15/16"	3 17/32"	2 1/8"
1'-8" x 8'-0"	20"	9 1/2"	5 1/4"	3"
1'-6" x 8'-0"	18"	9 1/2"	4 1/4"	3"
1'-4" x 8'-0"	16"	7"	4 1/2"	3"
1'-3" x 8'-0"	15"	7"	4"	2 11/16"
1'-2" x 8'-0"	14"	7"	3 1/2"	2 1/8"
1'-0" x 8'-0"	12"	7"	2 1/2"	1 3/8"

PRINCETON BIFOLD SMOOTH 8'-0"

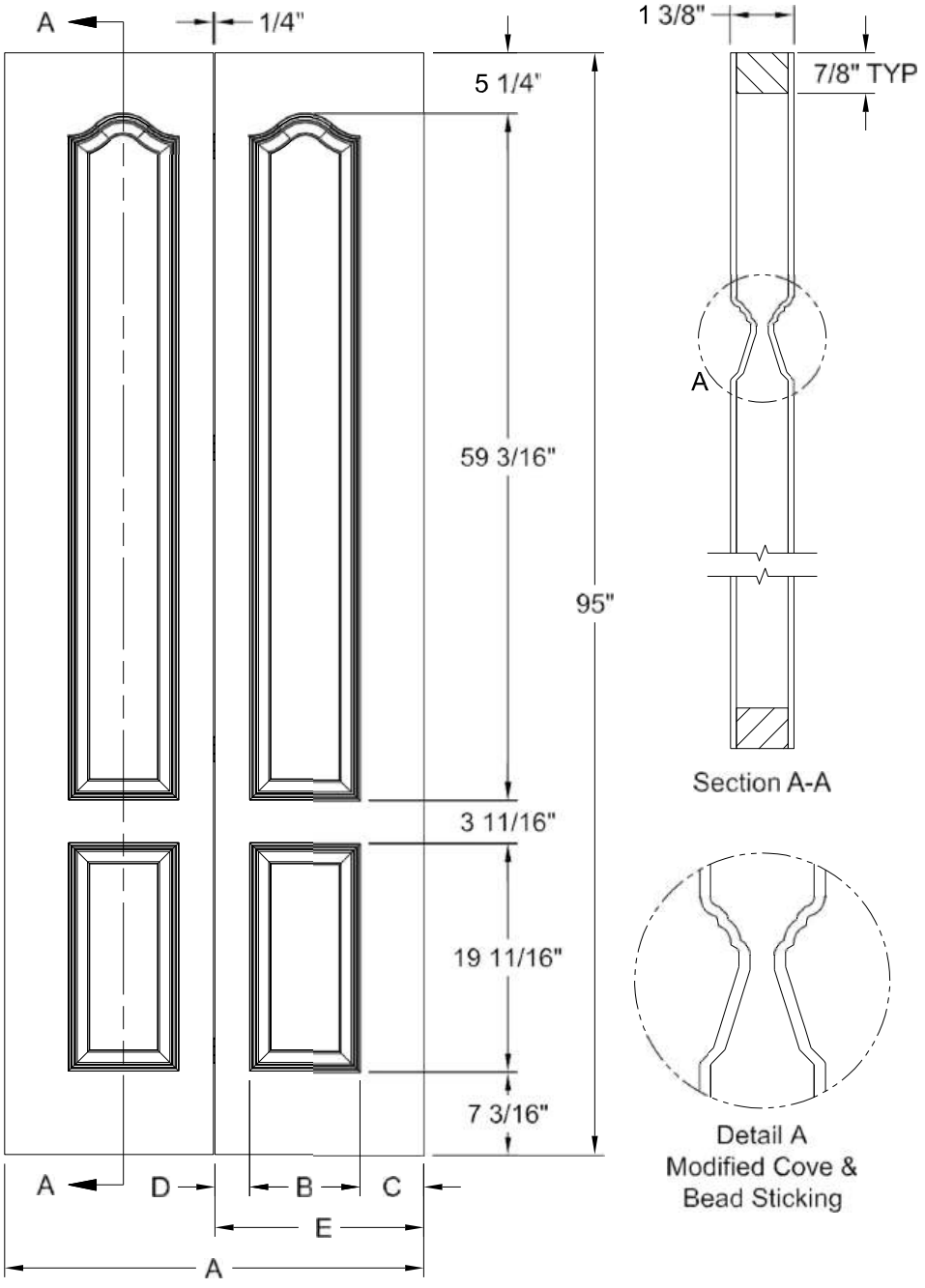

Dimension Table					
Door Size	A	B	C	D	E
3'-0" x 8'-0"	36"	9 1/2"	5 1/2"	3"	17 7/8"
2'-8" x 8'-0"	32"	7"	6"	3"	15 7/8"
2'-6" x 8'-0"	30"	7"	5 1/2"	2 1/2"	17 7/8"
2'-4" x 8'-0"	28"	7"	4 3/4"	2 1/4"	13 7/8"
2'-0" x 8'-0"	24"	7"	3 1/4"	1 3/4"	11 7/8"

ROCKPORT SMOOTH 6'-8"

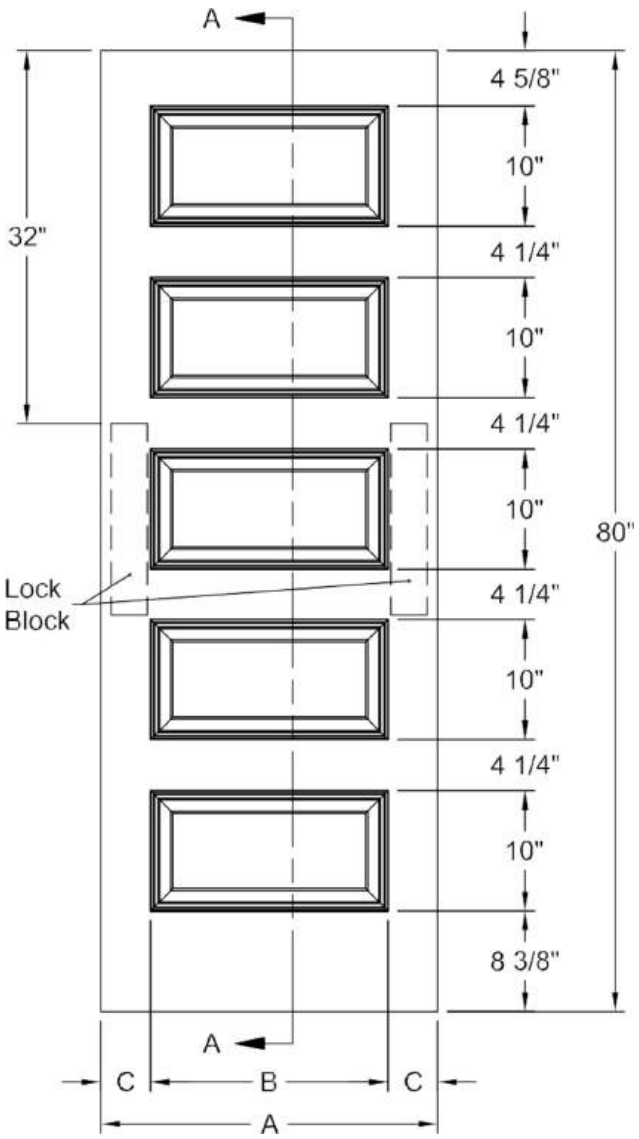

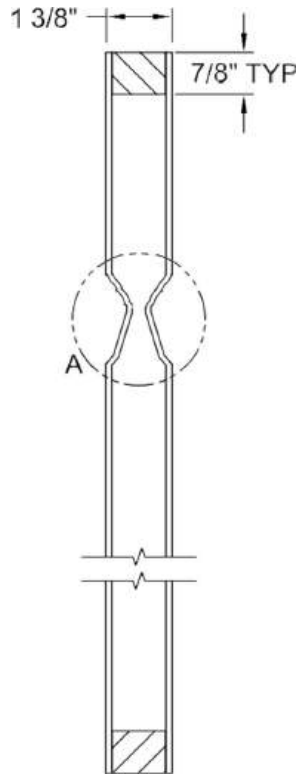

Section A-A

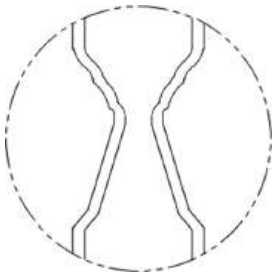

Detail A
Modified Cove &
Bead Sticking

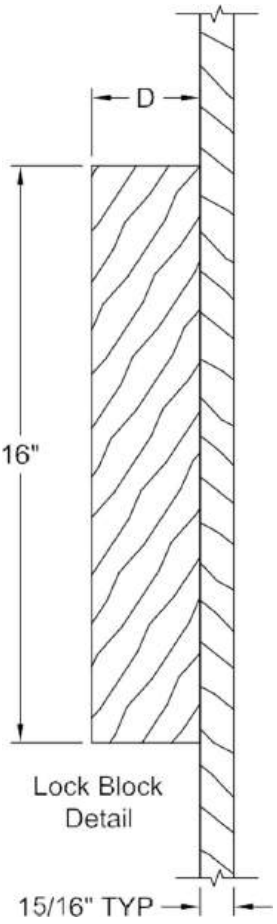

Dimension Table				
Door Size	A	B	C	D
3'-0" x 6'-8"	36"	25 3/4"	5 1/8"	3"
2'-10" x 6'-8"	34"	25 3/4"	4 1/8"	3"
2'-8" x 6'-8"	32"	23 3/4"	4 1/8"	3"
2'-6" x 6'-8"	30"	21 3/4"	4 1/8"	3"
2'-4" x 6'-8"	28"	19 3/4"	4 1/8"	3"
2'-2" x 6'-8"	26"	19 3/4"	3 1/8"	2 1/8"
2'-0" x 6'-8"	24"	15 3/4"	4 1/8"	3"
1'-8" x 6'-8"	20"	10 1/4"	4 7/8"	3"
1'-6" x 6'-8"	18"	10 1/4"	3 7/8"	2 11/16"

ROCKPORT BIFOLD SMOOTH 6'-8"

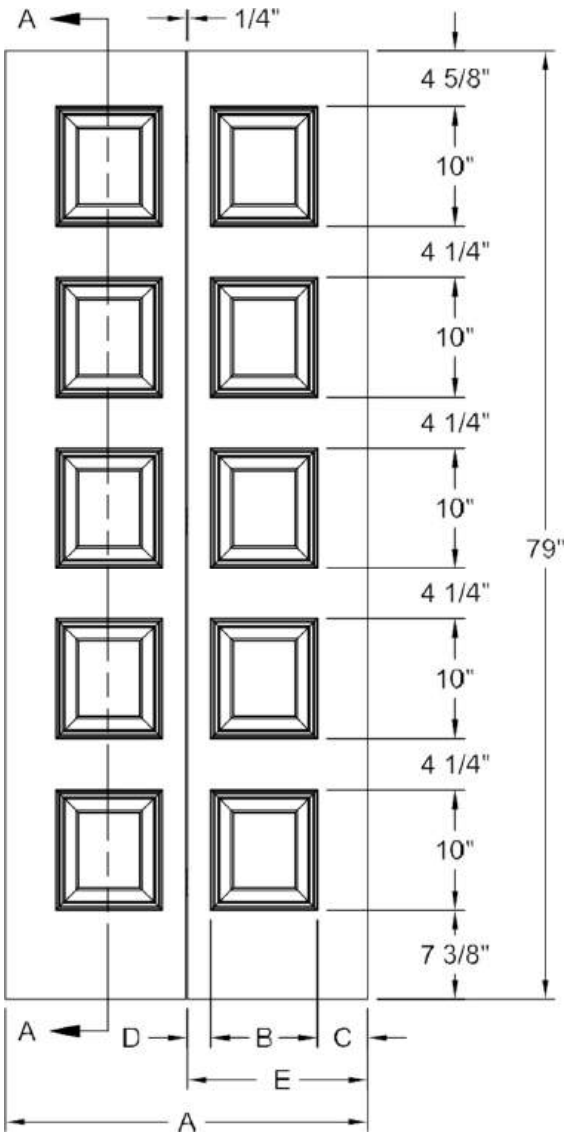

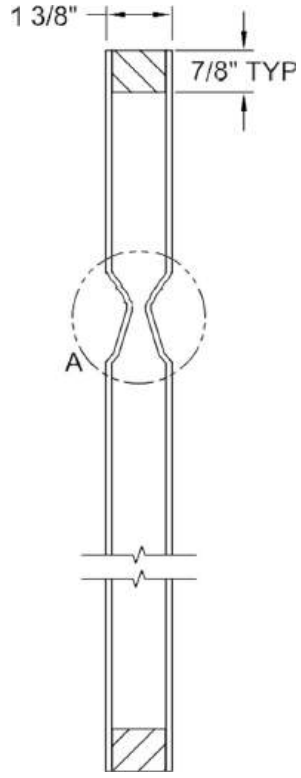

Section A-A

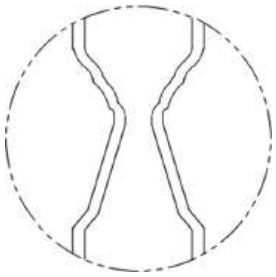

Detail A
Modified Cove &
Bead Sticking

Dimension Table					
Door Size	A	B	C	D	E
3'-0" x 6'-8"	36"	11 7/8"	4 3/16"	1 15/16"	17 7/8"
2'-8" x 6'-8"	32"	8 7/8"	5 3/16"	1 15/16"	15 7/8"
2'-6" x 6'-8"	30"	8 7/8"	4 3/16"	1 15/16"	17 7/8"
2'-4" x 6'-8"	28"	5 7/8"	5 3/16"	2 15/16"	13 7/8"
2'-0" x 6'-8"	24"	5 7/8"	4 3/16"	1 15/16"	11 7/8"

ROCKPORT SMOOTH 7'-0"

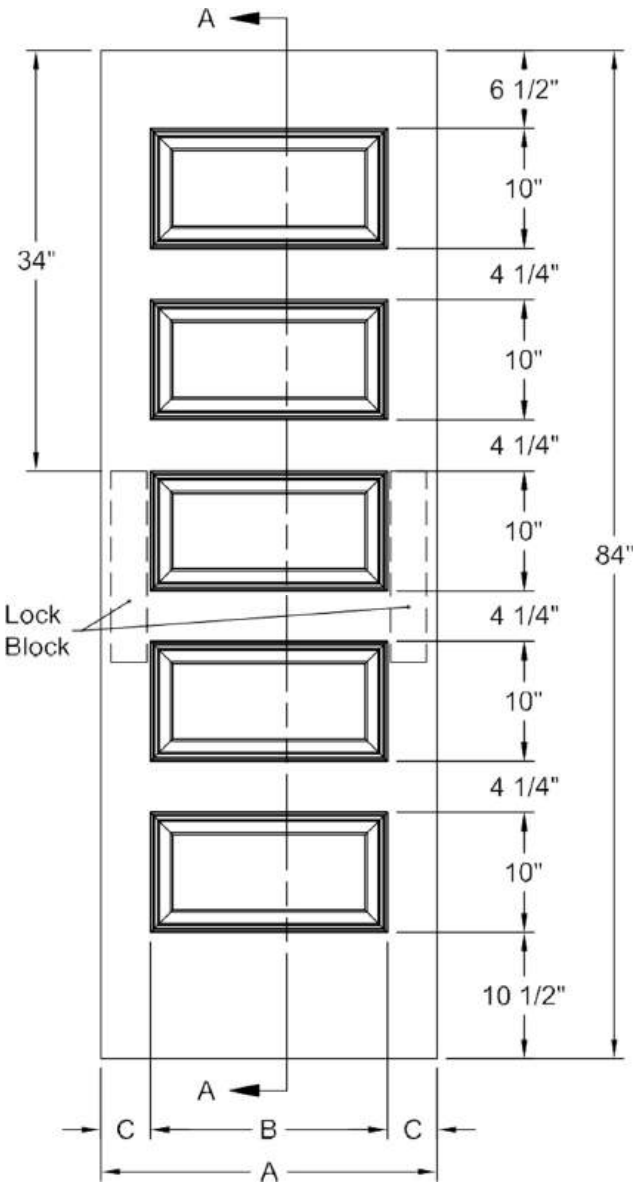

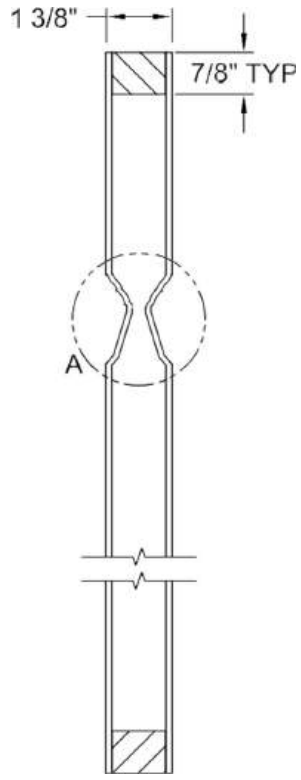

Section A-A

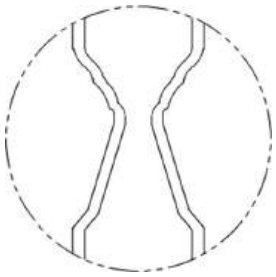

Detail A
Modified Cove &
Bead Sticking

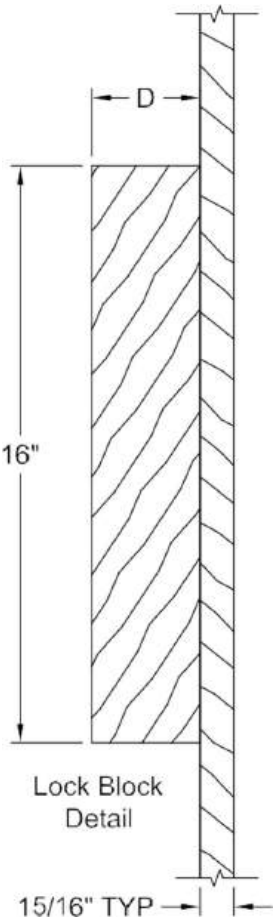

Dimension Table				
Door Size	A	B	C	D
3'-0" x 7'-0"	36"	25 3/4"	5 1/8"	3"
2'-10" x 7'-0"	34"	25 3/4"	4 1/8"	3"
2'-8" x 7'-0"	32"	23 3/4"	4 1/8"	3"
2'-6" x 7'-0"	30"	21 3/4"	4 1/8"	3"
2'-4" x 7'-0"	28"	19 3/4"	4 1/8"	3"
2'-2" x 7'-0"	26"	19 3/4"	3 1/8"	2 1/8"
2'-0" x 7'-0"	24"	15 3/4"	4 1/8"	3"
1'-8" x 7'-0"	20"	10 1/4"	4 7/8"	3"
1'-6" x 7'-0"	18"	10 1/4"	3 7/8"	2 11/16"

ROCKPORT BIFOLD SMOOTH 7'-0"

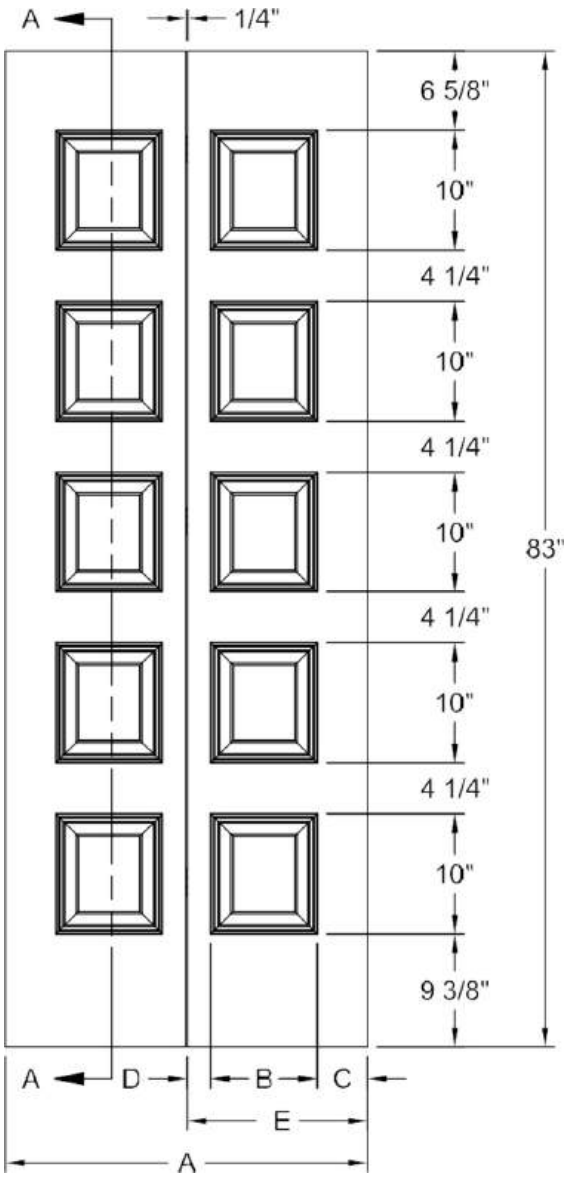

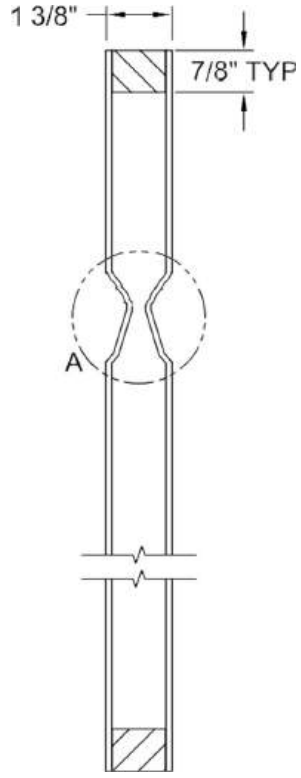

Section A-A

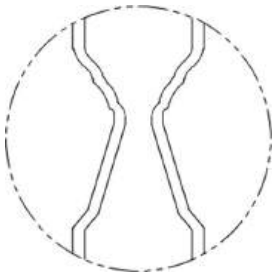

Detail A
Modified Cove &
Bead Sticking

Dimension Table					
Door Size	A	B	C	D	E
3'-0" x 7'-0"	36"	11 7/8"	4 3/16"	1 15/16"	17 7/8"
2'-8" x 7'-0"	32"	8 7/8"	5 3/16"	1 15/16"	15 7/8"
2'-6" x 7'-0"	30"	8 7/8"	4 3/16"	1 15/16"	17 7/8"
2'-4" x 7'-0"	28"	5 7/8"	5 3/16"	2 15/16"	13 7/8"
2'-0" x 7'-0"	24"	5 7/8"	4 3/16"	1 15/16"	11 7/8"

ROCKPORT SMOOTH 8'-0"

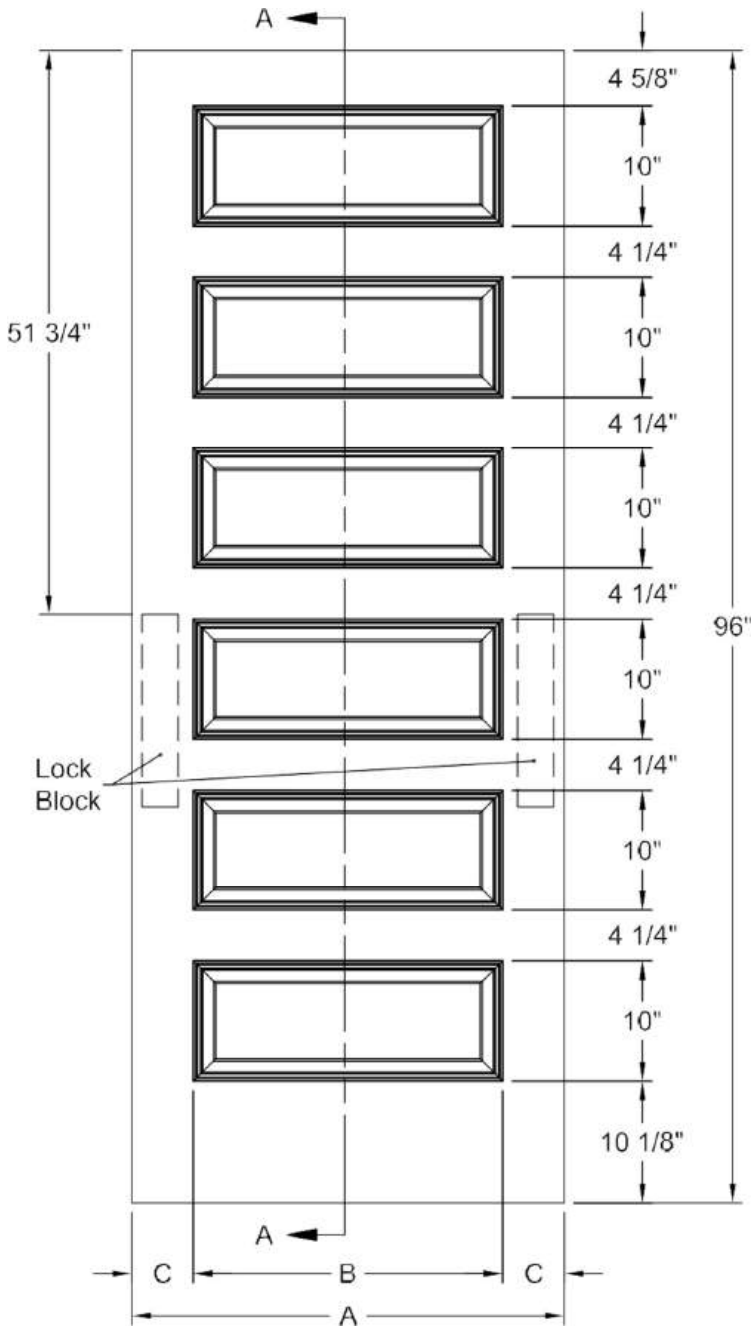

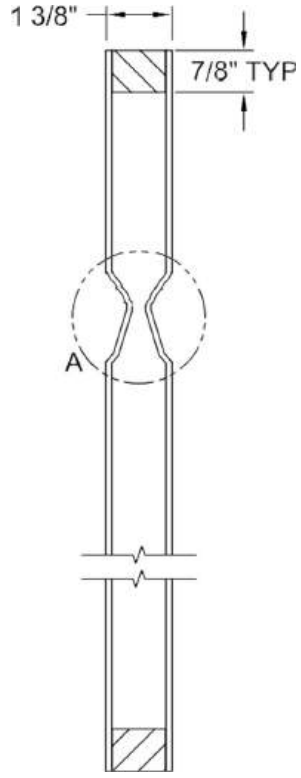

Section A-A

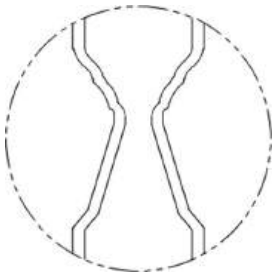

Detail A
Modified Cove &
Bead Sticking

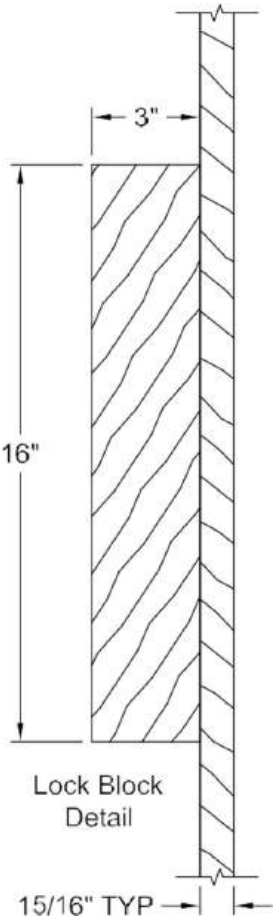

Lock Block
Detail

Dimension Table

Door Size	A	B	C
3'-0" x 8'-0"	36"	25 3/4"	5 1/8"
2'-10" x 8'-0"	34"	22 1/2"	5 3/4"
2'-8" x 8'-0"	32"	22 1/2"	4 3/4"
2'-6" x 8'-0"	30"	20 1/2"	4 3/4"
2'-4" x 8'-0"	28"	18 1/2"	4 3/4"
2'-2" x 8'-0"	26"	14 1/2"	5 3/4"
2'-0" x 8'-0"	24"	14 1/2"	4 3/4"
1'-8" x 8'-0"	20"	8 1/2"	5 3/4"
1'-6" x 8'-0"	18"	8 1/2"	4 3/4"

SANTA FE SMOOTH 6'-8"

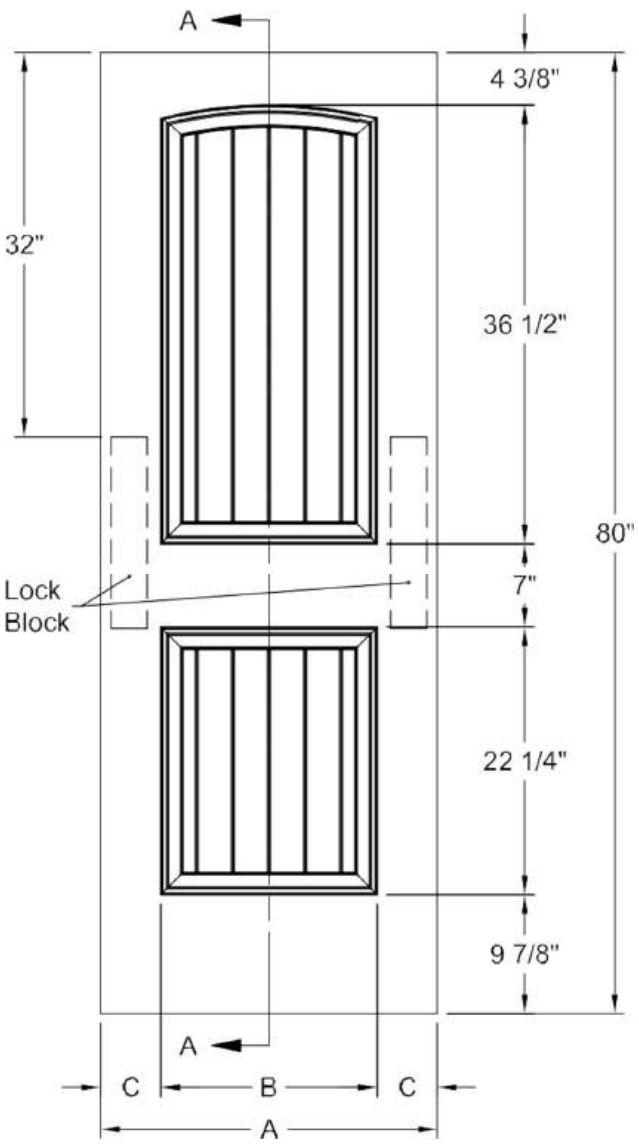

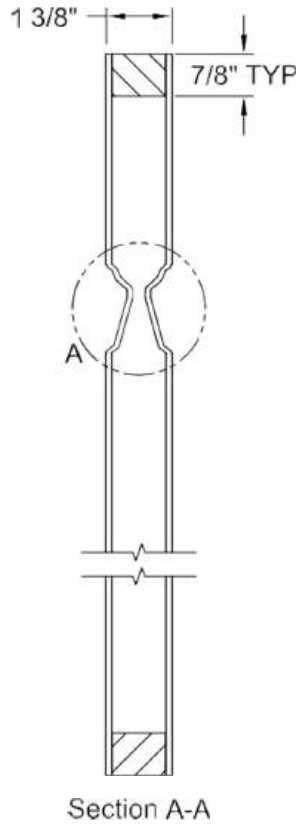

Section A-A

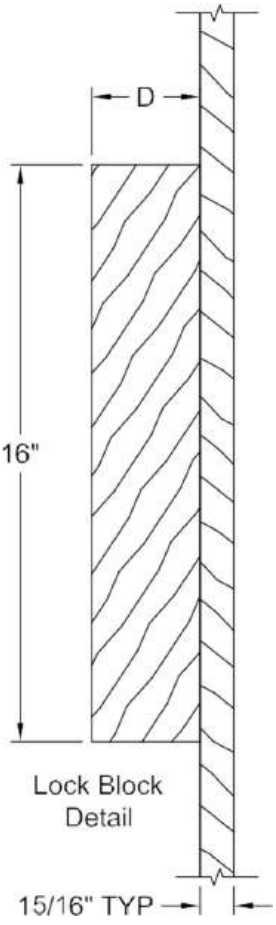

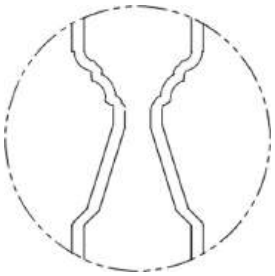

Detail A
Ovolo Sticking

Dimension Table				
Door Size	A	B	C	D
3'-0" x 6'-8"	36"	24"	6"	3"
2'-10" x 6'-8"	34"	24"	5"	3"
2'-8" x 6'-8"	32"	23"	4 1/2"	3"
2'-6" x 6'-8"	30"	21"	4 1/2"	3"
2'-4" x 6'-8"	28"	18"	5"	3"
2'-2" x 6'-8"	26"	18"	4"	3"
2'-0" x 6'-8"	24"	14"	5"	3"
1'-10" x 6'-8"	22"	14"	4"	2 11/16"
1'-8" x 6'-8"	20"	10"	5"	3"
1'-6" x 6'-8"	18"	10"	4"	3"
1'-4" x 6'-8"	16"	7"	4 1/2"	3"
1'-3" x 6'-8"	15"	7"	4"	3"
1'-2" x 6'-8"	14"	7"	3 1/2"	2 1/8"
1'-0" x 6'-8"	12"	7"	2 1/2"	1 3/8"

SANTA FE BIFOLD SMOOTH 6'-8"

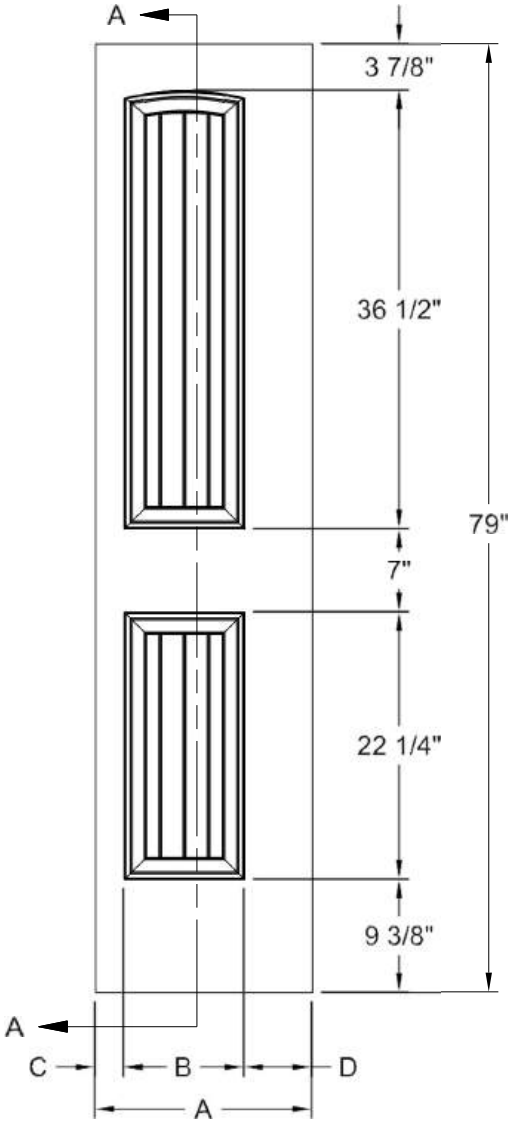

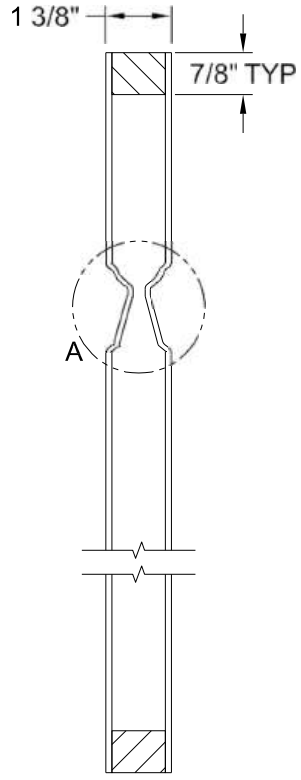

Section A-A

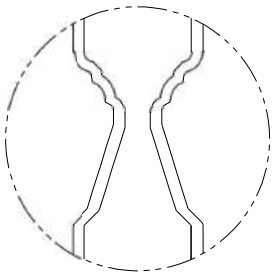

Detail A
Ovolo Sticking

Dimension Table				
Door Size	A	B	C	D
1'-6" x 6'-8"	18"	10"	2 3/8"	5 5/8"
1'-4" x 6'-8"	16"	7"	6 5/8"	6 5/8"
1'-3" x 6'-8"	15"	7"	5 5/8"	5 5/8"
1'-2" x 6'-8"	14"	7"	4 5/8"	4 5/8"
1'-0" x 6'-8"	12"	7"	3 1/8"	3 1/8"

SANTA FE SMOOTH 7'-0"

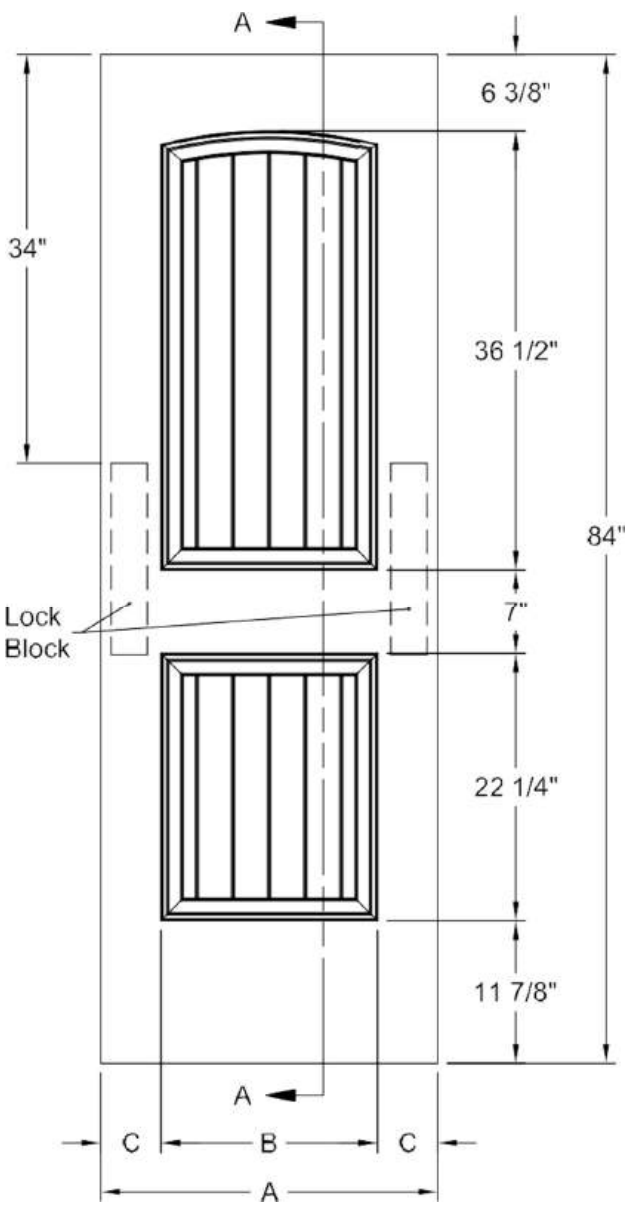

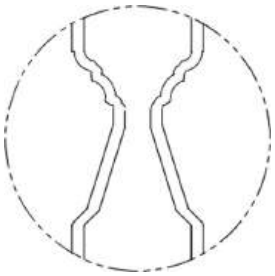

Detail A
Ovolo Sticking

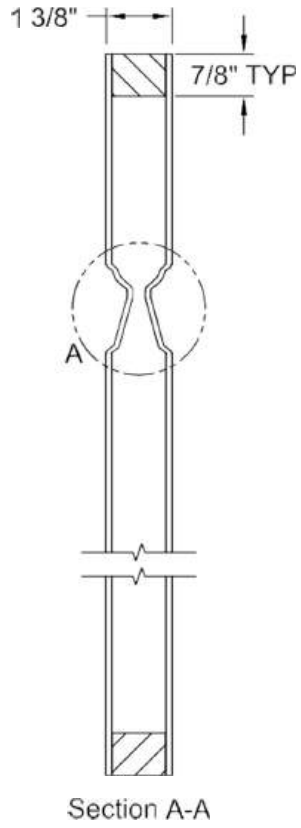

Section A-A

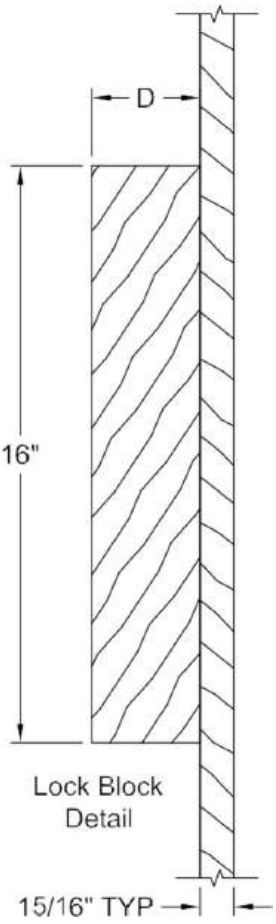

Lock Block
Detail

Dimension Table				
Door Size	A	B	C	D
3'-0" x 7'-0"	36"	24"	6"	3"
2'-10" x 7'-0"	34"	24"	5"	3"
2'-8" x 7'-0"	32"	23"	4 1/2"	3"
2'-6" x 7'-0"	30"	21"	4 1/2"	3"
2'-4" x 7'-0"	28"	18"	5"	3"
2'-2" x 7'-0"	26"	18"	4"	3"
2'-0" x 7'-0"	24"	14"	5"	3"
1'-10" x 7'-0"	22"	14"	4"	2 11/16"
1'-8" x 7'-0"	20"	10"	5"	3"
1'-6" x 7'-0"	18"	10"	4"	3"
1'-4" x 7'-0"	16"	7"	4 1/2"	3"
1'-3" x 7'-0"	15"	7"	4"	3"
1'-2" x 7'-0"	14"	7"	3 1/2"	2 1/8"
1'-0" x 7'-0"	12"	7"	2 1/2"	1 3/8"

SANTA FE BIFOLD SMOOTH 7'-0"

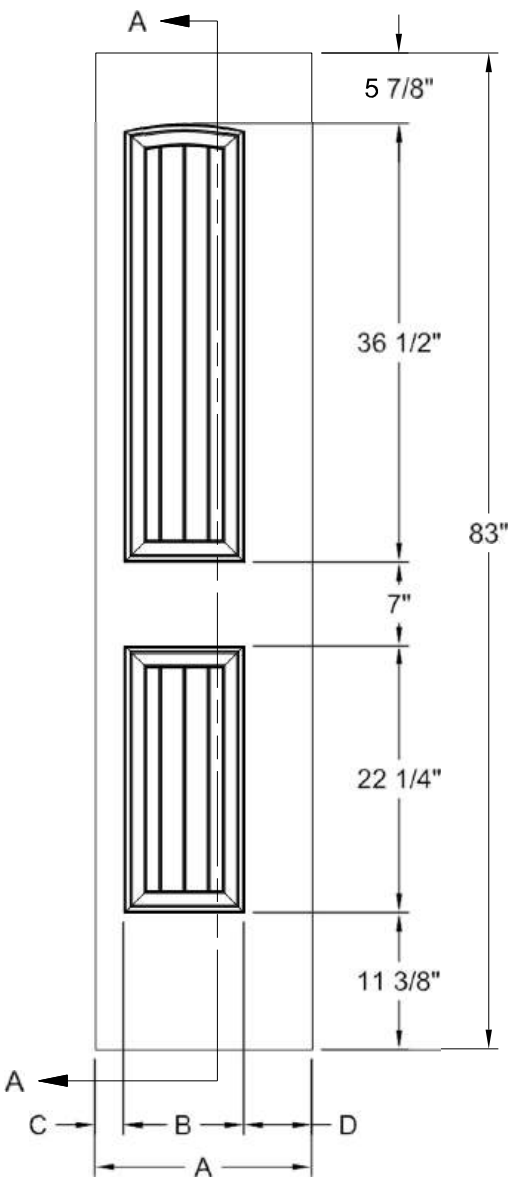

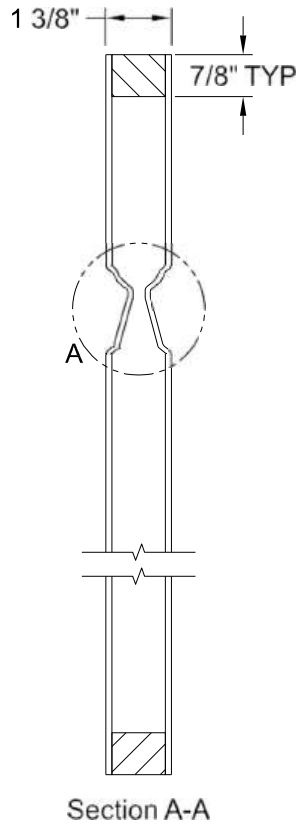

Section A-A

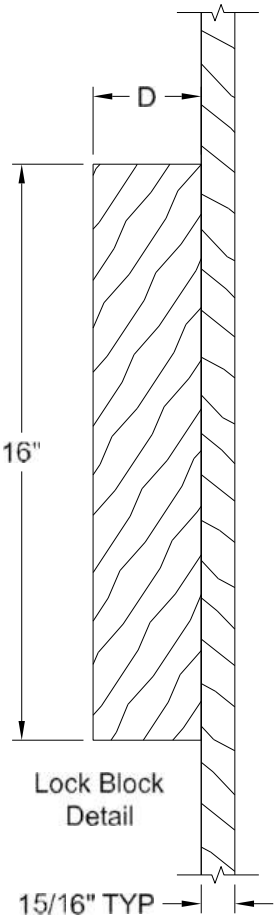

Lock Block Detail

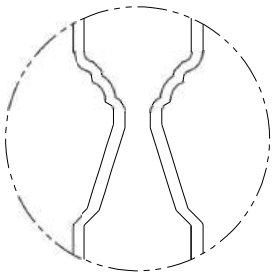

Detail A
Ovolo Sticking

Dimension Table				
Door Size	A	B	C	D
1'-6" x 7'-0"	18"	10"	2 3/8"	5 5/8"
1'-4" x 7'-0"	16"	7"	2 3/8"	6 5/8"
1'-3" x 7'-0"	15"	7"	2 3/8"	5 5/8"
1'-2" x 7'-0"	14"	7"	2 3/8"	4 5/8"
1'-0" x 7'-0"	12"	7"	1 7/8"	3 1/8"

SANTA FE SMOOTH 8'-0"

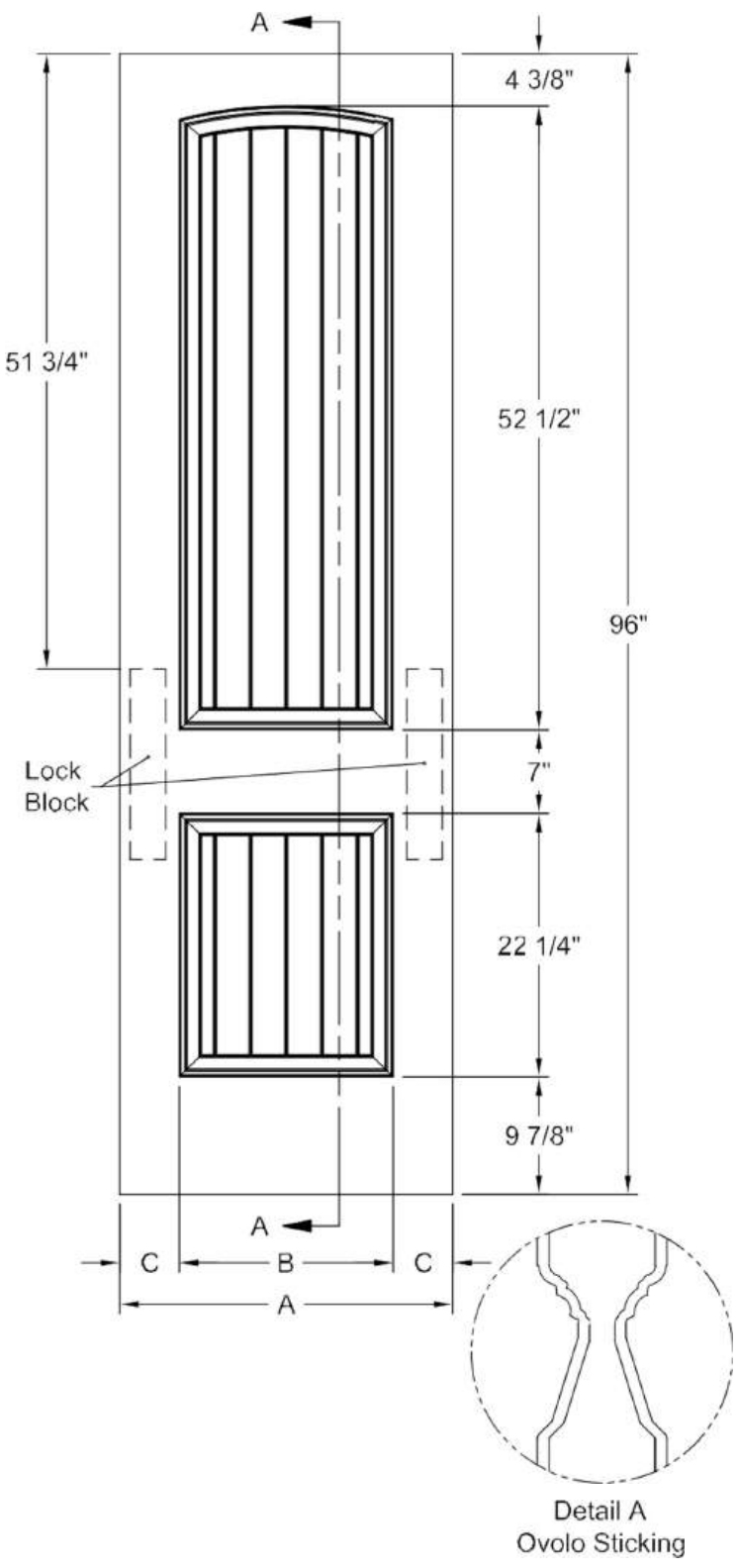

Detail A
Ovolo Sticking

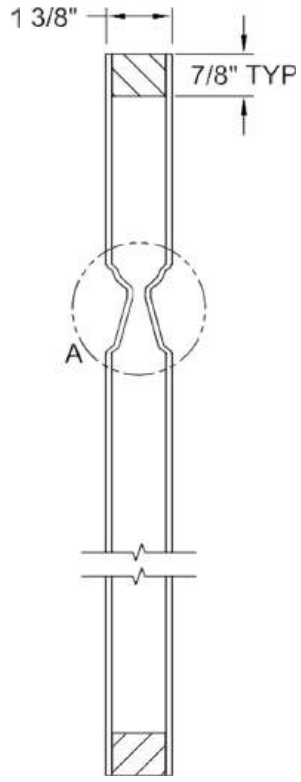

Section A-A

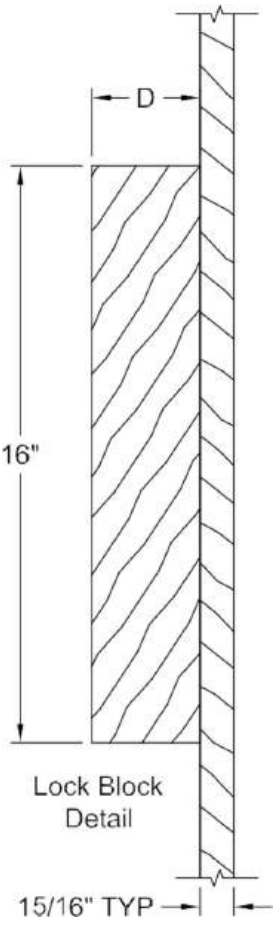

Lock Block
Detail

Dimension Table				
Door Size	A	B	C	D
3'-0" x 8'-0"	36"	24"	6"	3"
2'-10" x 8'-0"	34"	24"	5"	3"
2'-8" x 8'-0"	32"	23"	4 1/2"	3"
2'-6" x 8'-0"	30"	21"	4 1/2"	3"
2'-4" x 8'-0"	28"	18"	5"	3"
2'-2" x 8'-0"	26"	18"	4"	3"
2'-0" x 8'-0"	24"	14"	5"	3"
1'-10" x 8'-0"	22"	14"	4"	2 11/16"
1'-8" x 8'-0"	20"	10"	5"	3"
1'-6" x 8'-0"	18"	10"	4"	3"
1'-4" x 8'-0"	16"	7"	4 1/2"	3"
1'-3" x 8'-0"	15"	7"	4"	3"
1'-2" x 8'-0"	14"	7"	3 1/2"	2 1/8"
1'-0" x 8'-0"	12"	7"	2 1/2"	1 3/8"

SANTA FE BIFOLD SMOOTH 8'-0"

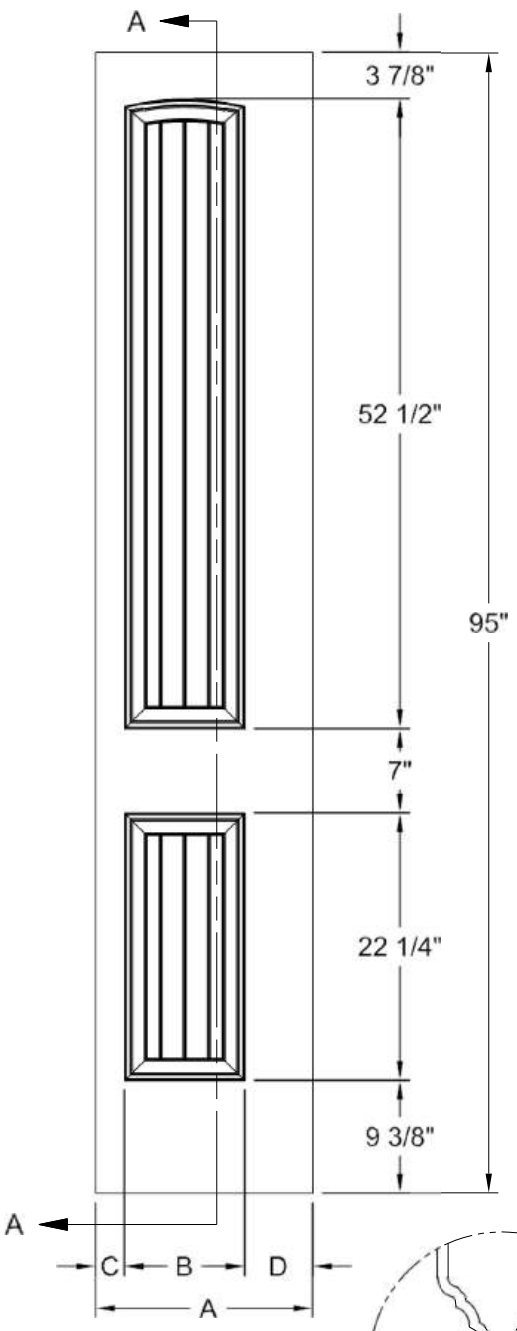

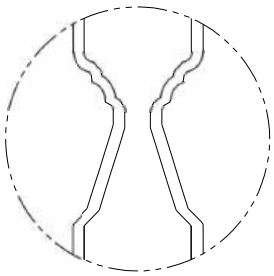

Detail A
Ovolo Sticking

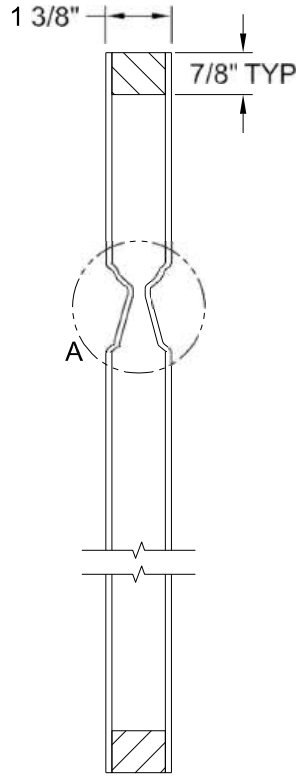

Section A-A

Dimension Table

Door Size	A	B	C	D
1'-6" x 8'-0"	18"	10"	1 7/8"	3 1/8"
1'-4" x 8'-0"	16"	7"	2 3/8"	4 5/8"
1'-3" x 6'-8"	15"	7"	2 3/8"	5 5/8"
1'-2" x 6'-8"	14"	7"	2 3/8"	6 5/8"
1'-0" x 6'-8"	12"	7"	2 3/8"	5 5/8"